Technical brochure

Strainer
FIA

FIA strainers are a range of angleway and straightway strainers, which are carefully designed to give favourable flow conditions. The design makes the strainer easy to install, and ensures quick strainer inspection and cleaning.

FIA strainers are used ahead of automatic controls, pumps, compressors etc., for initial plant start-up and where permanent filtration of the refrigerant is required. The strainer reduces the risk of undesirable system breakdowns and reduces wear and tear on plant components.

FIA strainers are equipped with a screen mesh of stainless steel, available in sizes 100, 150, 250 and 500µ (microns*), (US 150, 100, 72, 38 mesh*).

* Mesh is the number of threads per inch.
µ The distance between two threads is expressed in microns (1µ = 1 /1000 mm).

Features

- Applicable to HCFC, HFC, R717 (Ammonia) and R744 (CO_2).
  Can be used in chemical and petrochemical applications.
- Modular Concept:
  – Each valve housing is available with several different connection types and sizes.
  – Possible to convert FIA strainers to any other product in the Flexline™ SVL family (shut-off valve, hand operated regulating valve, check & stop valve or check valve) just by replacing the complete top part.
- Fast and easy overhaul service. It is easy to replace the top part and no welding is needed.
- A filter net of stainless steel mounted directly without extra gaskets allows easy servicing.
- Two types of strainer inserts are available:
  - A plain insert of stainless steel.
  - A pleated insert for sizes ½" to 6" (DN 15-150) with an extra-large surface, which ensures long intervals between cleaning and low pressure drop.
- FIA 15-40 (½–1½ in.):
  A special insert (50µ) can be used in combination with a standard version when cleaning a plant during commissioning.
- FIA 50-200 (2–8 in.):
  A large-capacity filter bag (50µ) can be inserted for cleaning the plant during commissioning.
- FIA 65-200 (2½ - 8 in.) can be equipped with a magnetic insert for detention of iron particles and other magnetic particles.
- Each strainer clearly marked with type, size and performance range
- Housing and bonnet are of low-temperature steel in accordance with the requirements of the Pressure Equipment Directive and those of other international classification authorities.
- Temperature range:
  –60°C /+150°C (–76°F /+302°F)
- Maximum working pressure:
  52 bar (754 psi g)
- Classification:
  To obtain an updated product certification list, please contact your local Danfoss Sales Company.

© Danfoss A/S (MWA), 2015-01

Design

Connections
Available with the following connections:

- Butt-weld DIN (EN 10220)
  DN 15 - 200 (½–8 in.)
- Butt-weld ANSI (B 36.10 Schedule 80),
  DN 15 - 40 (½–1½ in.)
- Butt-weld ANSI (B 36.10 Schedule 40),
  DN 50 - 200 (2–8 in.)
- Socket Weld (ANSI B 16.11),
  DN 15 - 50 (½–2 in.)
- FPT Female Pipe Thread, NPT
  (ANSI/ASME B 1.20.1),
  DN 15 - 32 (½–1¼ in.)

Strainer Insert
A filter grid and filter net of stainless steel ensure long element life. The filter net offers a very high degree of cleanability.

Housing
The strainer housing is made of special, cold resistant steel.

Pressure Equipment Directive (PED)
FIA strainers are approved in accordance with the European standard specified in the Pressure Equipment Directive and are CE marked.
For further details and restrictions, see the installation instructions.

Nominal bore	DN ≤ 25 (1 in.)	DN 32–80 mm ($1^1/_4$ - 3 in.)	DN 100–200 mm (4–8 in.)
Classified for	Fluid group I		
Category	Article 3, paragraph 3	II	III

Installation/Maintenance
The strainer is designed to resist high internal pressures. However, the piping system in general should be designed to avoid liquid traps and reduce the risk of hydraulic pressure caused by thermal expansion.

Install the strainer with the cover in downward position.

Danfoss recommends replacement/cleaning of the strainer when the differential pressure loss >0.5 bar (7.3 psi) in the liquid line and >0.05 bar (0.7 psi) in the suction line. The max. permissible differential pressure is 1 bar (15 psi).

For further information, refer to installation instructions for FIA.

Identification:

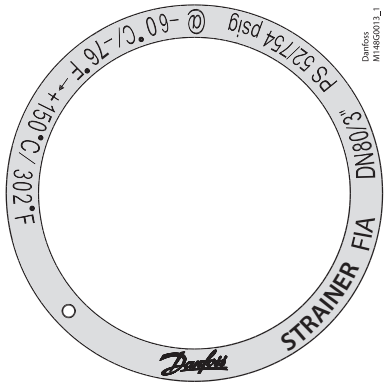

Example of marking ring, FIA

Technical data

- *Refrigerants*
  Applicable to HCFC, HFC, R717 (Ammonia) and R744 (CO_2). For further information, please see the installation instructions for FIA.
- *Temperature range*
  –60°C/+150°C (–76°F/+302°F).
- *Maximum working pressure:*
  52 bar g (754 psi g).

 © Danfoss A/S (MWA), 2015-01

Selection of filter size

The mesh aperture size of the strainer must satisfy the requirements stated by the suppliers of the equipment to be protected.

The following recommendations of aperture size apply in general to refrigeration installations:

Definition
Mesh is the number of threads per inch. µ (microns) is the distance between two threads (1µ = 1 /1000 mm).

All lines
First start up: **50**µ
(Use strainer insert with removable insert for FIA DN15-40 or separate filter bag for FIA DN 50-200. 50µ insert should normally be removed after the first 24 hours of operation)

Liquid Lines
Ahead of pumps: ..... **500**µ [38 mesh]
After pumps: ..... **150**µ [100 mesh] / 250µ [72 mesh]
In front of AKVA valves ..... **100**µ [150 mesh]

Protection of automatic regulation equipment
Generally ..... **150**µ [100 mesh] / 250µ [72 mesh]
Sensitive equipment, for example, suction regulators with low temperature ..... **250**µ [72 mesh]

Suction Lines
Ahead of screw compressor ..... **250**µ [72 mesh]
Ahead of piston compressor ..... **150**µ [100 mesh]

Flow coefficient (DIN/ANSI)

Connection size (DN)	µ	**mesh**	**wire**	**wire**	**free space**	**screen area**			
						Plain elements		Pleated elements	
FIA			mm	in.	%	cm²	in²	cm²	in²
15–20 (1/2" - 3/4")	100		0.068	0.003	35	25	3.9	45	7.0
	150	100	0.10	0.004	36	25	3.9	45	7.0
	250	72	0.10	0.004	51	25	3.9	45	7.0
	500	38	0.16	0.006	57.6	25	3.9	45	7.0
25–40 (1" - 1 1/2")	100		0.068	0.003	35	71	11	160	25.0
	150	100	0.10	0.004	36	71	11	160	25.0
	250	72	0.10	0.004	51	71	11	160	25.0
	500	38	0.16	0.006	57.6	71	11	160	25.0
50 (2")	100		0.068	0.003	35	71	11	200	31.2
	150	100	0.10	0.004	36	87	13.5	200	31.2
	250	72	0.10	0.004	51	87	13.5	200	31.2
	500	38	0.16	0.006	57.6	87	13.5	200	31.2
65 (2 1/2")	150	100	0.10	0.004	36	127	19.7	305	47.6
	250	72	0.10	0.004	51	127	19.7	305	47.6
	500	38	0.16	0.006	57.6	127	19.7	305	47.6
80 (3")	150	100	0.10	0.004	36	205	31.8	450	70.2
	250	72	0.10	0.004	51	205	31.8	450	70.2
	500	38	0.16	0.006	57.6	205	31.8	450	70.2
100 (4")	150	100	0.10	0.004	36	370	57.4	790	123.2
	250	72	0.10	0.004	51	370	57.4	790	123.2
	500	38	0.16	0.006	57.6	370	57.4	790	123.2
125 (5")	150	100	0.10	0.004	36	510	79.1	1105	172.4
	250	72	0.10	0.004	51	510	79.1	1105	172.4
	500	38	0.16	0.006	57.6	510	79.1	1105	172.4
150 (6")	150	100	0.10	0.004	36	726	112.5	1600	249.6
	250	72	0.10	0.004	51	726	112.5	1600	249.6
	500	38	0.16	0.006	57.6	726	112.5	1600	249.6
200 (8")	150	100	0.10	0.004	36	1315	203.8		
	250	72	0.10	0.004	51	1315	203.8		
	500	38	0.16	0.006	57.6	1315	203.8		

Selection of strainer size
(Continued)

K_v values

DN	FIA angle-plain filter net				FIA angle-pleated filter net		
	µ100	µ150	µ250	µ500	µ150	µ250	µ500
15	3.3	3.4	3.5	3.7	4.2		
20	6.9	7.1	7.3	7.7	8.8		
25	13.8	14.0	14.5	15.2	17.2	17.9	
32	23.0	23.8	24.7	25.5	29.2	30.5	
40	25.1	25.5	26.4	28.1	31.4	32.6	
50	45.1	45.9	47.6	50.2	56.7	58.8	62.0
65		56.1	57.8	60.4	69.3	71.4	74.6
80		104.6	108.0	113.1	129.2	133.4	139.7
100		162.4	167.5	176.0	200.6	206.9	217.4
125		275.4	283.9	298.4	340.2	350.7	368.6
150		362.1	373.2	391.9	447.3		
200		572.9	590.8	620.5			

DN	FIA straight-plain filter net				FIA straight-pleated filter net		
	µ100	µ150	µ250	µ500	µ150	µ250	µ500
15	2.5	2.6	2.7	2.8	3.3		
20	5.3	5.4	5.6	5.9	6.9		
25	10.5	10.7	11.1	11.6	13.8	14.5	
32	17.6	18.2	18.9	19.5	23.9	24.7	
40	19.2	19.5	20.2	21.5	25.5	26.4	
50	34.5	35.1	36.4	38.4	45.9	47.6	50.2
65		42.9	44.2	46.2	56.1	57.8	60.4
80		80.0	82.6	86.5	104.6	108.0	113.1
100		124.2	128.1	134.6	162.4	167.5	176.0
125		210.6	217.1	228.2	275.4	283.9	298.4
150		276.9	285.4	299.7	362.1		
200		438.1	451.8	474.5			

© Danfoss A/S (MWA), 2015-01

Material specification

FIA 15 - 40 (1/2 in. - 1 1/2 in.)

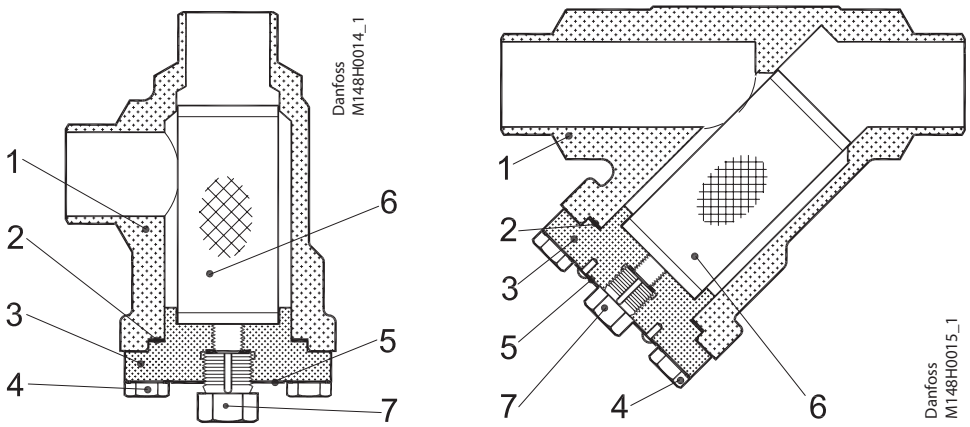

FIA 15-40 (1/2 in. - 1 1/2 in.)

No.	Part	Material	DIN	ISO	ASTM
1	Housing	Steel	G20Mn5QT, 10213-3 ---------- P285QH+QT, 10222-4		LCC, A352 ---------- LF2, A350
2	Gasket	Fiber, Nonasbestos			
3	Cover	Steel	P285QH EN10222-4 ---------- P275NL1 or 2 EN10028-3		LF2, A350 ---------- A, A662
4	Bolts	Stainless steel	A2-70	A2-70	Type 308
5	Marking label	Aluminum			
6	Strainer insert	Stainless steel			
7	Pressure relief (screw)	Stainless steel			

Material specification

FIA 50 - 200 (2 in. - 8 in.)

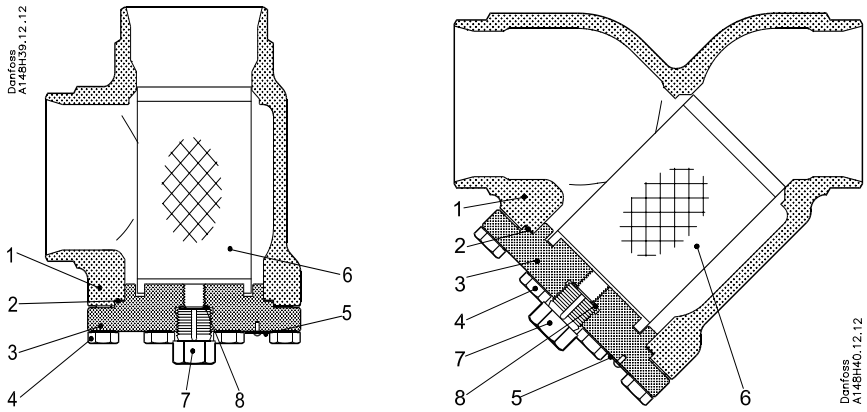

FIA 50-200 (2 in. - 8 in.)

No.	Part	Material	DIN	ISO	ASTM
1	Housing	Steel	G20Mn5QT, 10213-3 ---------- P285QH+QT, 10222-4		LCC, A352 ---------- LF2, A350
2	Gasket	Fiber, Nonasbestos			
3	Cover	Steel	P285QH EN10222-4 ---------- P275NL1 or 2 EN10028-3		LF2, A350 ---------- A, A662
4	Bolts	Stainless steel	A2-70	A2-70	Type 308
5	Marking label	Aluminum			
6	Strainer insert	Stainless steel			
7	Pressure relief (screw)	Stainless steel			
8*	Packing washer	Aluminum			

* pos 8 used in FIA 50-200

 © Danfoss A/S (MWA), 2015-01

Connections

Butt-weld ANSI

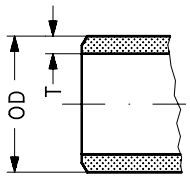

Size mm	Size in.	OD mm	T mm	OD in.	T in.
Butt-weld ANSI (B 36.10 Schedule 80)					
15	1/2	21.3	3.7	0.839	0.146
20	3/4	26.9	4.0	1.059	0.158
25	1	33.7	4.6	1.327	0.181
32	1 1/4	42.4	4.9	1.669	0.193
40	1 1/2	48.3	5.1	1.902	0.201
Butt-weld ANSI (B 36.10 Schedule 40)					
50	2	60.3	3.9	2.37	0.15
65	2 1/2	73.0	5.2	2.87	0.20
80	3	88.9	5.5	3.50	0.22
100	4	114.3	6.0	4.50	0.24
125	5	141.3	6.6	5.56	0.26
150	6	168.3	7.1	6.63	0.28
200	8	219.1	8.2	8.63	0.32

SOC

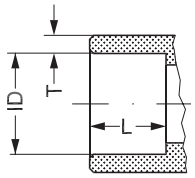

Size mm	Size in.	ID mm	T mm	ID in.	T in.
Socket welding ANSI (B 16.11)					
15	½	21.8	6.0	0.858	0.235
20	¾	27.2	4.6	1.071	0.181
25	1	33.9	7.2	1.335	0.284
32	1¼	42.7	6.1	1.743	0.240
40	1½	48.8	6.6	1.921	0.260
50	2	61.2	6.2	2.41	0.24

FPT

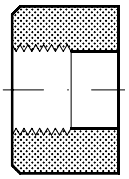

Size mm	Size in.	Inside pipe tread
FPT inside pipe thread, NPT (ANSI/ASME B 1.20.1)		
15	½	(½ × 14 NPT)
20	¾	(¾ × 14 NPT)
25	1	(1 × 11.5 NPT)
32	1¼	(1¼ × 11.5 NPT)

Dimensions and weights

FIA 15 - 65

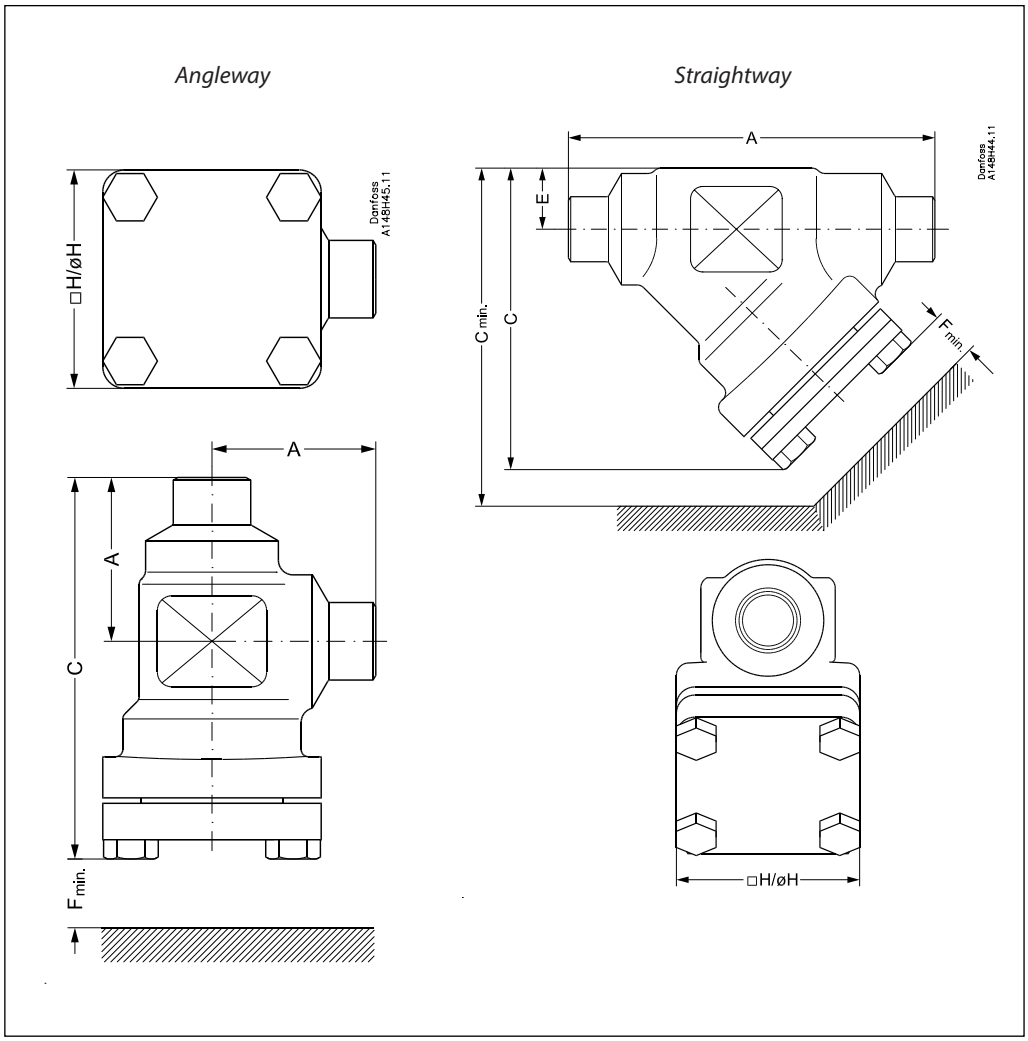

Angleway

Strainer size		A	C	H	$F_{min.}$	Weight
FIA 15-20	mm	45	105	60	68	1.1 kg
(1/2" - 3/4")	in.	1.77	4.13	2.36	2.68	2.4 lbs
FIA 25-40	mm	55	132	70	95	1.7 kg
(1" - 1 1/2")	in.	2.17	5.20	2.76	3.74	3.7 lbs
FIA 50	mm	60	132	77	92	2.8 kg
(2")	in.	2.36	5.20	3.03	3.62	6.2 lbs
FIA 65	mm	70	152	90	107	3.8 kg
(2 1/2")	in.	2.76	5.98	3.54	4.21	8.4 lbs

Straightway

Strainer size		A	C	$C_{min.}$	H	E	$F_{min.}$	Weight
FIA 15-20	mm	120	99	133	60	20	68	1.4 kg
(1/2" - 3/4")	in.	4.72	3.90	5.24	2.36	0.79	2.68	3.1 lbs
FIA 25-40	mm	155	129	177	70	26	95	2.4 kg
(1" - 1 1/2")	in.	6.10	5.08	6.97	2.76	1.02	3.74	5.3 lbs
FIA 50	mm	148	138	184	77	32	92	3.5 kg
(2")	in.	5.83	5.43	7.24	3.03	1.26	3.62	7.7 lbs
FIA 65	mm	176	165	219	90	40	107	5.3 kg
(2 1/2")	in.	6.93	6.50	8.62	3.54	1.57	4.21	11.7 lbs

© Danfoss A/S (MWA), 2015-01

Dimensions and weights

FIA 80-200

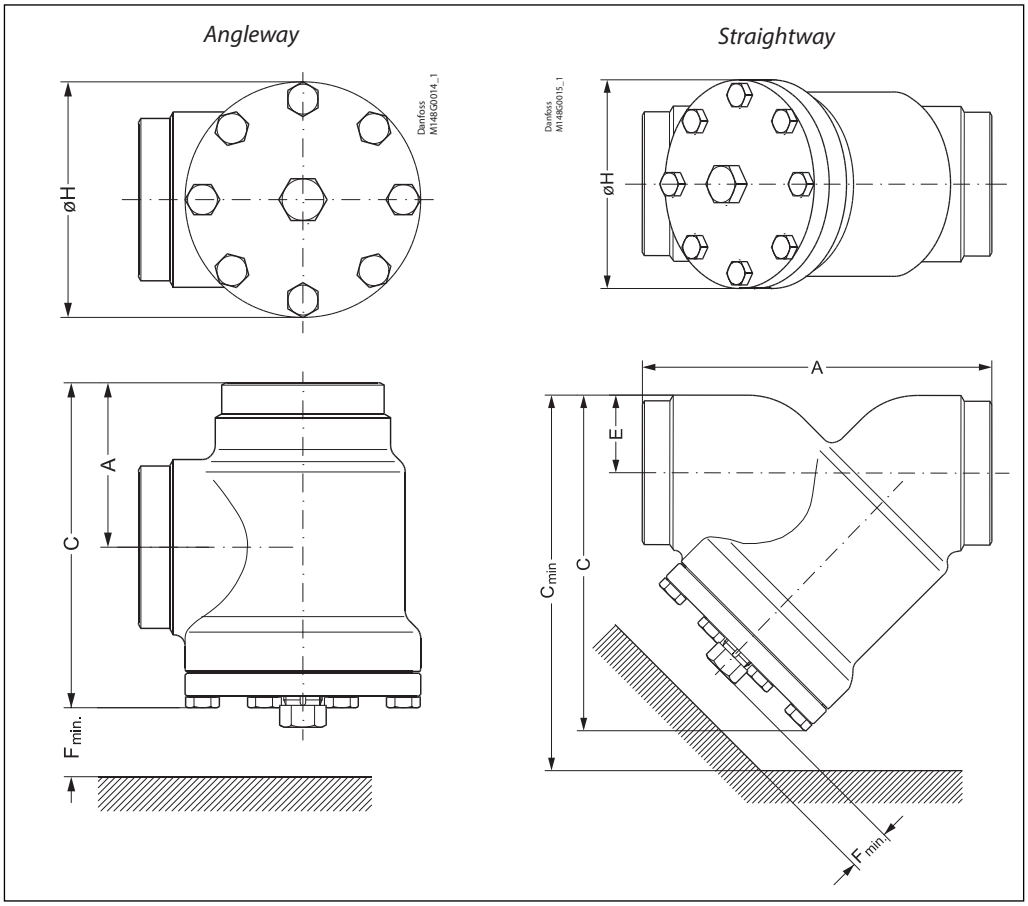

Angleway

Strainer size		A	C	H	$F_{min.}$	Weight
FIA 80	mm	90	189	129	133	7.3 kg
(3")	in.	3.54	7.44	5.08	5.24	16.1 lbs
FIA 100	mm	106	223	156	163	11.9 kg
(4")	in.	4.17	8.78	6.14	6.42	26.2 lbs
FIA 125	mm	128	268	192	190	21.2 kg
(5")	in.	5.04	10.6	7.56	7.48	46.7 lbs
FIA 150	mm	145	303	219	223	30.5 kg
(6")	in.	5.71	11.93	8.62	8.78	67.2 lbs
FIA 200	mm	180	372	276	280	68 kg
(8")	in.	7.09	14.65	10.87	11.02	150 lbs

Straightway

Strainer size		A	C	$C_{min.}$	H	E	$F_{min.}$	Weight
FIA 80	mm	216	204	271	129	48	133	8.6 kg
(3")	in.	8.50	8.03	10.67	5.08	1.89	5.24	19 lbs
FIA 100	mm	264	256	337	156	60	163	14.9 kg
(4")	in.	10.39	10.08	13.27	6.14	2.36	6.42	32.8 lbs
FIA 125	mm	322	313	408	192	74	190	26.9 kg
(5")	in.	12.68	12.32	16.06	7.56	2.91	7.48	59.3 lbs
FIA 150	mm	370	370	482	219	91	223	51 kg
(6")	in.	14.57	14.57	18.98	8.62	3.58	8.78	112 lbs
FIA 200	mm	464	465	605	276	117	280	95 kg
(8")	in.	18.27	18.31	23.82	10.87	4.61	11.02	209 lbs

Ordering

The table below is used to identify the strainer required. Please note that you have to order **FIA strainer without insert, a strainer insert** and **accessories.**

Example:
FIA 50 D ANG + FIA-X 50 150µ Strainer insert + Filter Bag = **148H5912** + **148H3130** + **148H3150**

Butt-weld ANSI (B 36.10 Schedule 80) - Angleway

Size mm	Size in.	Type	FIA Without Strainer insert	Strainer insert 100µ 150 mesh	Strainer insert 150µ 100 mesh	Strainer insert 250µ 72 mesh	Strainer insert 500µ 38 mesh	Pleated Strainer insert 150µ 100 mesh	Pleated Strainer insert 250µ 72 mesh	Pleated Strainer insert 500µ 38 mesh
15	½	FIA 15 A ANG	**148B5244**	**148H3122**	**148H3124**	**148H3126**	**148H3128**	**148H3303**	**148H3363**	-
20	¾	FIA 20 A ANG	**148B5344**							
25	1	FIA 25 A ANG	**148B5444**	**148H3123**	**148H3125**	**148H3127**	**148H3129**	**148H3304**	**148H3269**	-
32	1¼	FIA 32 A ANG	**148B5545**							
40	1½	FIA 40 A ANG	**148B5642**							

Butt-weld ANSI (B 36.10 Schedule 80) - Straightway

15	½	FIA 15 A STR	**148B5247**	**148H3122**	**148H3124**	**148H3126**	**148H3128**	**148H3303**	**148H3363**	-
20	¾	FIA 20 A STR	**148B5347**							
25	1	FIA 25 A STR	**148B5447**	**148H3123**	**148H3125**	**148H3127**	**148H3129**	**148H3304**	**148H3269**	-
32	1¼	FIA 32 A STR	**148B5552**							
40	1½	FIA 40 A STR	**148B5644**							

Butt-weld ANSI (B 36.10 Schedule 40) - Angleway

50	2	FIA 50 A ANG	**148B5714**	**148H3157**	**148H3130**	**148H3138**	**148H3144**	**148H3179**	**148H3184**	**148H3189**
65	2½	FIA 65 A ANG	**148B5814**	-	**148H3131**	**148H3139**	**148H3145**	**148H3180**	**148H3185**	**148H3190**
80	3	FIA 80 A ANG	**148B5907**	-	**148H3119**	**148H3120**	**148H3121**	**148H3181**	**148H3186**	**148H3191**
100	4	FIA 100 A ANG	**148B6008**	-	**148H3132**	**148H3140**	**148H3146**	**148H3182**	**148H3187**	**148H3192**
125	5	FIA 125 A ANG	**148B6107**	-	**148H3133**	**148H3141**	**148H3147**	**148H3183**	**148H3188**	**148H3193**
150	6	FIA 150 A ANG	**148B6204**	-	**148H3134**	**148H3142**	**148H3148**	**148H3226**	-	-
200	8	FIA 200 A ANG	**148B6304**	-	**148H3135**	**148H3143**	**148H3149**	**148H3297**	-	-

Butt-weld ANSI (B 36.10 Schedule 40) - Straightway

50	2	FIA 50 A STR	**148B5716**	**148H3157**	**148H3130**	**148H3138**	**148H3144**	**148H3179**	**148H3184**	**148H3189**
65	2½	FIA 65 A STR	**148B5815**	-	**148H3131**	**148H3139**	**148H3145**	**148H3180**	**148H3185**	**148H3190**
80	3	FIA 80 A STR	**148B5908**	-	**148H3119**	**148H3120**	**148H3121**	**148H3181**	**148H3186**	**148H3191**
100	4	FIA 100 A STR	**148B6009**	-	**148H3132**	**148H3140**	**148H3146**	**148H3182**	**148H3187**	**148H3192**
125	5	FIA 125 A STR	**148B6108**	-	**148H3133**	**148H3141**	**148H3147**	**148H3183**	**148H3188**	**148H3193**
150	6	FIA 150 A STR	**148B6205**	-	**148H3134**	**148H3142**	**148H3148**	**148H3226**	-	-
200	8	FIA 200 A STR	**148B6305**	-	**148H3135**	**148H3143**	**148H3149**	**148H3297**	-	-

A = Butt-weld ANSI

ANG = Angleway
STR = Straightway

© Danfoss A/S (MWA), 2015-01

Ordering *(continued)*

Size mm	Size in.	Type	FIA Without Strainer insert	Strainer insert 100µ 150 mesh	Strainer insert 150µ 100 mesh	Strainer insert 250µ 72 mesh	Strainer insert 500µ 38 mesh	Pleated Strainer insert 150µ 100 mesh	Pleated Strainer insert 250µ 72 mesh	Pleated Strainer insert 500µ 38 mesh
FPT inside pipe thread, NPT (ANSI/ASME B 1.20.1) - Angleway										
15	½	FIA 15 FTP ANG	**148B5246**	**148H3122**	**148H3124**	**148H3126**	**148H3128**	**148H3303**	**148H3363**	-
20	¾	FIA 20 FTP ANG	**148B5346**							
25	1	FIA 25 FTP ANG	**148B5446**	**148H3123**	**148H3125**	**148H3127**	**148H3129**	**148H3304**	**148H3269**	-
32	1¼	FIA 32 FTP ANG	**148B5547**							
FPT inside pipe thread, NPT (ANSI/ASME B 1.20.1) - Straightway										
15	½	FIA 15 FTP STR	**148B5249**	**148H3122**	**148H3124**	**148H3126**	**148H3128**	**148H3303**	**148H3363**	-
20	¾	FIA 20 FTP STR	**148B5349**							
25	1	FIA 25 FTP STR	**148B5449**	**148H3123**	**148H3125**	**148H3127**	**148H3129**	**148H3304**	**148H3269**	-
32	1¼	FIA 32 FTP STR	**148B5549**							
Socket welding ANSI (B 16.11) - Angleway										
15	½	FIA 15 SOC ANG	**148B5245**	**148H3122**	**148H3124**	**148H3126**	**148H3128**	**148H3303**	**148H3363**	-
20	¾	FIA 20 SOC ANG	**148B5345**							
25	1	FIA 25 SOC ANG	**148B5445**	**148H3123**	**148H3125**	**148H3127**	**148H3129**	**148H3304**	**148H3269**	-
32	1¼	FIA 32 SOC ANG	**148B5546**							
40	1½	FIA 40 SOC ANG	**148B5643**							
50	2	FIA 50 SOC ANG	**148B5715**	**148H3157**	**148H3130**	**148H3138**	**148H3144**	**148H3179**	**148H3184**	**148H3189**
Socket welding ANSI (B 16.11) - Straightway										
15	½	FIA 15 SOC STR	**148B5248**	**148H3122**	**148H3124**	**148H3126**	**148H3128**	**148H3303**	**148H3363**	-
20	¾	FIA 20 SOC STR	**148B5348**							
25	1	FIA 25 SOC STR	**148B5448**	**148H3123**	**148H3125**	**148H3127**	**148H3129**	**148H3304**	**148H3269**	-
32	1¼	FIA 32 SOC STR	**148B5548**							
40	1½	FIA 40 SOC STR	**148B5645**							
50	2	FIA 50 SOC STR	**148B5717**	**148H3157**	**148H3130**	**148H3138**	**148H3144**	**148H3179**	**148H3184**	**148H3189**

SOC = Socket welding
FPT = Inside pipe thread

ANG = Angleway
STR = Straightway

Accessories

Part	Accessory for	**Code number**
Magnet insert	FIA 65-100	**148H3447**
	FIA 125-200	**148H3448**

Part	Accessory for	**Code number**
Strainer insert µ150 with removable insert µ50 for the first start- up	FIA 15-20	**148H3301**
	FIA 25-40	**148H3302**

Part	Accessory for	**Code number**
Filter bag	FIA 50	**148H3150**
	FIA 65	**148H3151**
	FIA 80	**148H3152**
	FIA 100	**148H3153**
	FIA 125	**148H3154**
	FIA 150	**148H3155**
	FIA 200	**148H3156**

Ordering FIA strainers from the parts programme

Example
(select from table 1 and 2)

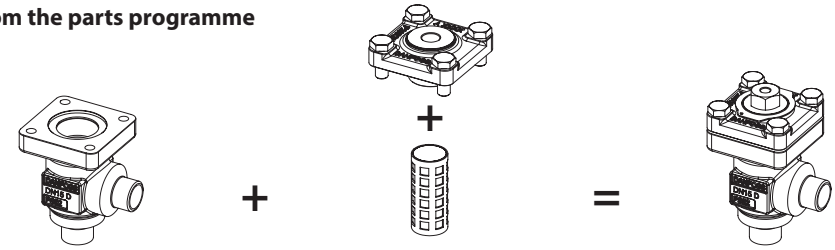

Strainer housing, size 15 (½ in.), DIN butt weld, angleway, **148B5452** Table 1

+

Top part, FIA, size 25 (1 in.) **148B5476** + Strainer insert, 250µ, 72 mesh **148H3127** *Table 2*

=

Table 1
SVL valve housings w/different connections

Please note:
Not all sizes available for SVA-L - see table 2.

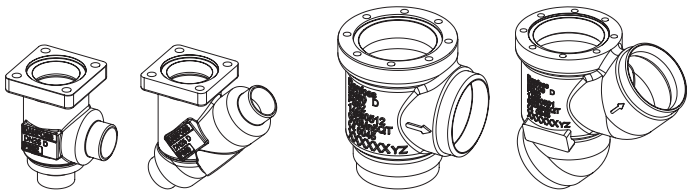

Sizes [DN]		Valve Housing SVL								
		DN 15-65 mm (½ - 2½ in.)				DN 80-125 mm (3 - 5 in.)				
		DIN-Butt weld		ANSI-Butt weld		SOC		FPT		T
mm	in.	ANG	STR	ANG	STR	ANG	STR	ANG	STR	ANG
15	½	148B5252	148B5253	148B5254	148B5255	148B5256	148B5257	148B5258	148B5259	
20	¾	148B5352	148B5353	148B5354	148B5355	148B5356	148B5357	148B5358	148B5359	
25	1	148B5452	148B5453	148B5454	148B5455	148B5456	148B5457	148B5458	148B5459	
32	1¼	148B5576	148B5577	148B5578	148B5579	148B5580	148B5581	148B5582	148B5583	
40	1½	148B5652	148B5653	148B5654	148B5655	148B5656	148B5657			
50	2	148B5741	148B5742	148B5743	148B5744	148B5745	148B5746			
65	2½	148B5816	148B5817	148B5818	148B5819					
80	3	148B5912	148B5913	148B5914	148B5915					
100	4	148B6014	148B6015	148B6016	148B6017					
125	5	148B6112	148B6113	148B6114	148B6115					

Table 2
FIA complete top part including gaskets and bolts

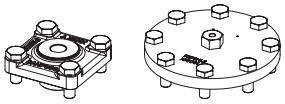

Sizes [DN]		FIA 15-65 / FIA 80-125		Strainer insert 100µ 150 mesh	Strainer insert 150µ 100 mesh	Strainer insert 250µ 72 mesh	Strainer insert 500µ 38 mesh	Pleated Strainer insert 150µ 100 mesh	Pleated Strainer insert 250µ 72 mesh	Pleated Strainer insert 500µ 38 mesh
mm	in.	Complete top part FIA								
15	½	148B5284	+	148H3122	148H3124	148H3126	148H3128	148H3303	-	-
20	¾									
25	1	148B5484	+	148H3123	148H3125	148H3127	148H3129	148H3304	148H3269	-
32	1¼									
40	1½									
50	2	148B5748	+	148H3157	148H3130	148H3138	148H3144	148H3179	148H3184	148H3189
65	2½	148B5832	+	-	148H3131	148H3139	148H3145	148H3180	148H3185	148H3190
80	3	148B5922	+	-	148H3119	148H3120	148H3121	148H3181	148H3186	148H3191
100	4	148B6024	+	-	148H3132	148H3140	148H3146	148H3182	148H3187	148H3192
125	5	148B6122	+	-	148H3133	148H3141	148H3147	148H3183	148H3188	148H3193

Danfoss can accept no responsibility for possible errors in catalogues, brochures and other printed material. Danfoss reserves the right to alter its products without notice. This also applies to products already on order provided that such alterations can be made without subsequential changes being necessary in specifications already agreed.
All trademarks in this material are property of the respective companies. Danfoss and the Danfoss logotype are trademarks of Danfoss A/S. All rights reserved.

 © Danfoss A/S (MWA), 2015-01