ENGINEERING
TOMORROW

Data sheet

Check & stop valve, SCA-X
Check valve, CHV-X

SCA-X are check valves with a built-in shut-off valve function. SCA-X valves are avilable in angleway versions.

CHV-X are check valves only. CHV-X are available in both angleway and straightway versions.

The valves are designed to open at very low differential pressures, allow favourable flow conditions and are easy to disassemble for inspection and service.

The SCA-X is equipped with vented cap and has internal backseating enabling the spindle seal to be replaced whilst the valve still under pressure.

Laser cut V-ports provide excellent opening characteristics (SCA-X/CHV-X 50-125).

The valve cone has a built-in flexibility to ensure a precise and tight closing towards the valve seat.

A well balanced dampening effect between the piston and the cylinder gives an optimal protection during low loads and against pulsations.

Features

- Applicable to HCFC, HFC, R717 (Ammonia), R744 (CO_2), Propane, Butane, Iso-Butane and Ethane.
- Modular Concept:
  - Each valve housing is available with several different connection types and sizes.
  - Possible to convert SCA-X or CHV-X to any other product in the FlexlineTM SVL family (Hand operated regulating valve, shut-off valve or strainer) just by replacing the complete top part.
- Fast and easy valve overhaul service. It is easy to replace the top part and no welding is needed.
- Designed to open at a very low differential pressure of 0.04 bar (0.58 psig).
- Designed with a built-in damping chamber preventing valve flutter in case of low refrigerant velocity and/or low density.
- Each valve is clearly marked with type, size and performance range.
- Easy to disassemble for inspection and service.
- Internal backseating enables replacement of the spindle seal whilst the valve is active, i.e. under pressure.
- Optimal flow characteristics ensuring quick opening to the fully open position.
- Protection against pulsation by built-in damping facility.
- Housing and bonnet material is low temperature steel according to requirements of the Pressure Equipment Directive and other international classification authorities.
- Equipped with Stainless steel bolts.
- Max. working pressure:
  52 bar g (754 psi g)
- Temperature range:
  –60°C/+150° (–76°F/+302°F)
- Classification: DNV, CRN, BV, EAC etc.
  To get an updated list of certification on the products please contact your local Danfoss Sales Company.

Design

Connections
Available with the following connections:

- Butt-weld DIN (EN 10220)
  DN 15 - 125 (½ - 5 in.)
- Butt-weld ANSI (B 36.10 Schedule 80),
  DN 15 - 40 (½ - 1½ in.)
- Butt-weld ANSI (B 36.10 Schedule 40),
  DN 50 - 125 (2 - 5 in.)
- Butt-weld GOST, (8734-75 and 8732-78)
  DN 15 - 125 (½ - 5 in.)
- Socket-weld ANSI (B 16.11),
  DN 50 (2 in.)

Housing
The housing is made from special, cold resistant steel.

Valve cone
Valve cone with built in metallic stop - prevents damage to teflon ring in case of overtightening.

Damping chamber
The chamber is filled with refrigerants (gas or liquid), which provides a damping effect when the valve opens and closes.

Spindle (SCA-X)
Made of polished stainless steel, which is ideal for O-ring sealing.

Packing Gland (SCA-X)
The "full temperature range" packing gland is the standard for the entire SVL platform.

This ensures perfect tightness throughout the whole temperature range:
–60/+150°C (–76/+302°F).

Pressure Equipment Directive (PED)
The SCA-X/CHV-X valves are approved according to the European standard specified in the Pressure Equipment Directive and are CE marked.

For further details / restrictions - see the product instruction.

Installation
The valve must be mounted vertically with the cone downwards.

The valve is designed to resist very high internal pressure. However, the piping system in general should be designed to avoid liquid traps and reduce the risk of hydraulic pressure caused by thermal expansion.

For further information refer to installation instructions for SCA-X/CHV-X.

If cold refrigeration oil having low viscosity enters and settles in the damping chamber, problems with the check valve may arise. Consequently, it may be necessary to modify the valve for more viscous liquids by enlarging the hole to the damping chamber.

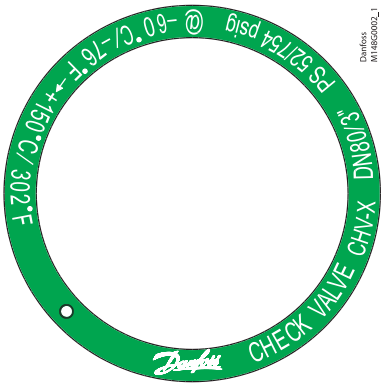

Example of marking ring, CHV-X

SCA-X/CHV-X valves			
Nominal bore	DN = < 25 mm (1 in.)	DN32-80 mm (1¼ - 3 in.)	DN100 - 125 mm (4 - 5 in.)
Classified for	Fluid group I		
Category	Article 3, paragraph 3	II	III

Application

Figure 3 shows the check & stop valve SCA-X in the discharge line of a screw compressor unit. The SCA-X valve in the discharge line prevents "back condensation" in the oil separator as well as pressure equalising through the compressor.

Compared to an ordinary shut-off and check valve arrangement the combined check & stop valve solution, as shown, is easier to install and has lower flow resistance.

Installation of the SCA-X/CHV-X in the economizer line is **not** recommended.

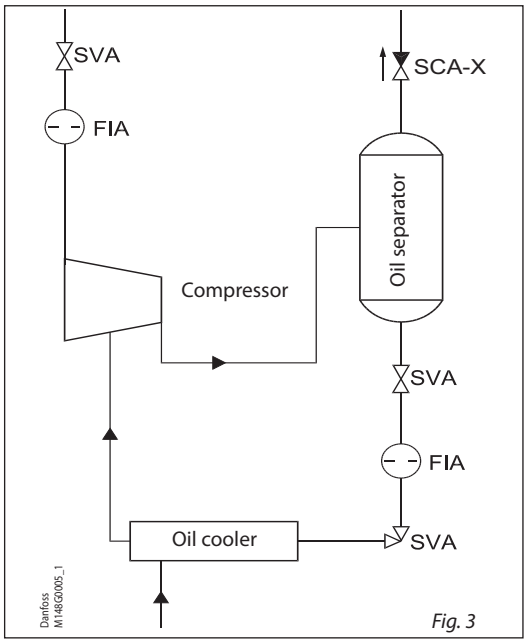

Fig. 3

Computation and selection

Introduction
When dimensioning SCA-X/CHV-X, it is important to select a valve that is best suited to all operating conditions. Therefore, it is necessary to consider both the nominal and part load working conditions.

The SCA-X/CHV-X valve can be calculated in two ways:
– Using the tables below.
– Using Coolselector®2

Example

SI-Units
Assumed working conditions:
Maximum flow $\dot{V}$ = 1000 m³/h
Density ρ = 3.0 kg/m³
Minimum part load = 33%

Used expressions:
Recommended velocity - C_{rec} [m/s]
Minimum recommended velocity - $C_{min, rec}$ [m/s]
Maximum velocity - C_{max} [m/s]
Part load velocity - C_{part} [m/s]

We know the density ρ ≈ 3.0 kg/m³, consequently C_{rec} as well as $C_{min, rec}$ can be found in the figure below (standard valve).

C_{rec} ≈14 m/s
$C_{min, rec}$ ≈ 3 m/s

US-Units
Assumed working conditions:
Maximum flow $\dot{V}$ = 1160 gpm
Density ρ = 0.187 lb/feet³
Minimum part load = 33%

Used expressions:
Recommended velocity - C_{rec} [ft/min]
Minimum recommended velocity - $C_{min, rec}$ [ft/min]
Maximum velocity - C_{max} [ft/min]
Part load velocity - C_{part} [ft/min]

We know the density ρ ≈ 0.187 lb/feet³, consequently C_{rec} as well as $C_{min, rec}$ can be found in the figure (standard valve).

C_{rec} ≈ 2756 ft/min
$C_{min, rec}$ ≈ 591 ft/min

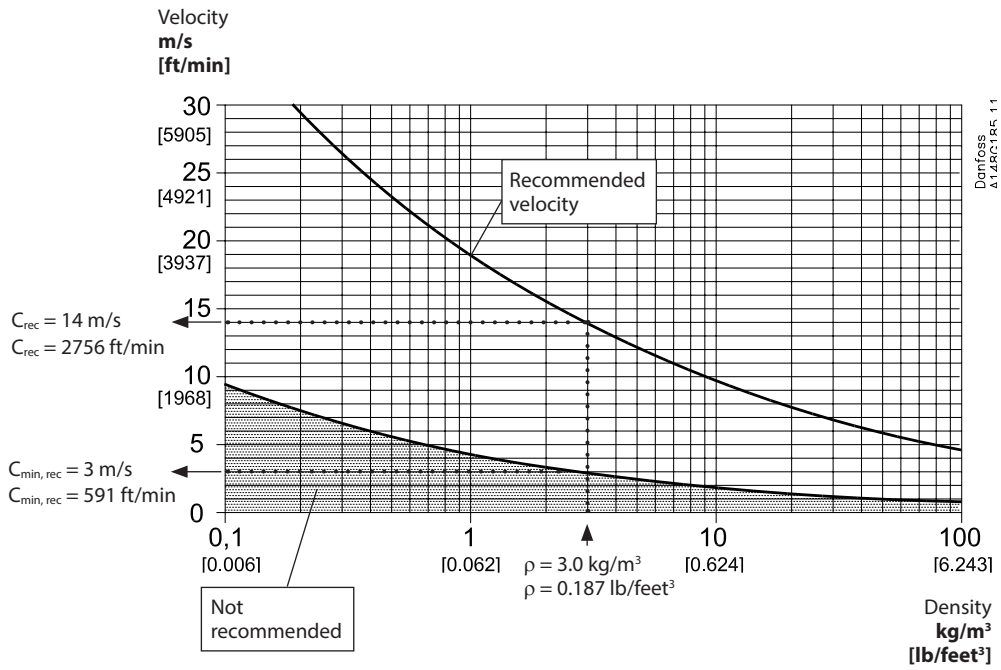

Fig. 1

Selection example continued on following page.

Computation and selection
(continued)

Knowing that $\dot{V}$ = 1000 m³/h (1160 gpm) fig. 2 gives the following choices:

For SCA-X/CHV-X in size DN 100 the maximum velocity $C_{max} \approx$ 31 m/s (6100 ft/min)
For SCA-X/CHV-X in size DN 125 the maximum velocity $C_{max} \approx$ 20 m/s (3900 ft/min)

In conclusion SCA-X in size DN 125 is selected because $C_{max} \approx$ 20 m/s (3900 ft/min) comes nearest to the recommended velocity $C_{rec} \approx$ 14 m/s (2756 ft/min) and at the same time part load conditions fulfil the requirements, as described:

We know that $C_{max} \approx$ 20 m/s (3900 ft/min) and that minimum part load is 33%. It follows that $C_{part} \approx$ 6.5 m/s (1290 ft/min). Thus, C_{part} (6.5 m/s) > $C_{min, rec}$ (3.0 m/s) and the selected SCA-X model DN125 is the perfect choice.
If the valve in question (for instance under part load conditions) provides a velocity less than $C_{min, rec}$ the valve might start hammering and become noisy. As a result the valve may wear prematurely.

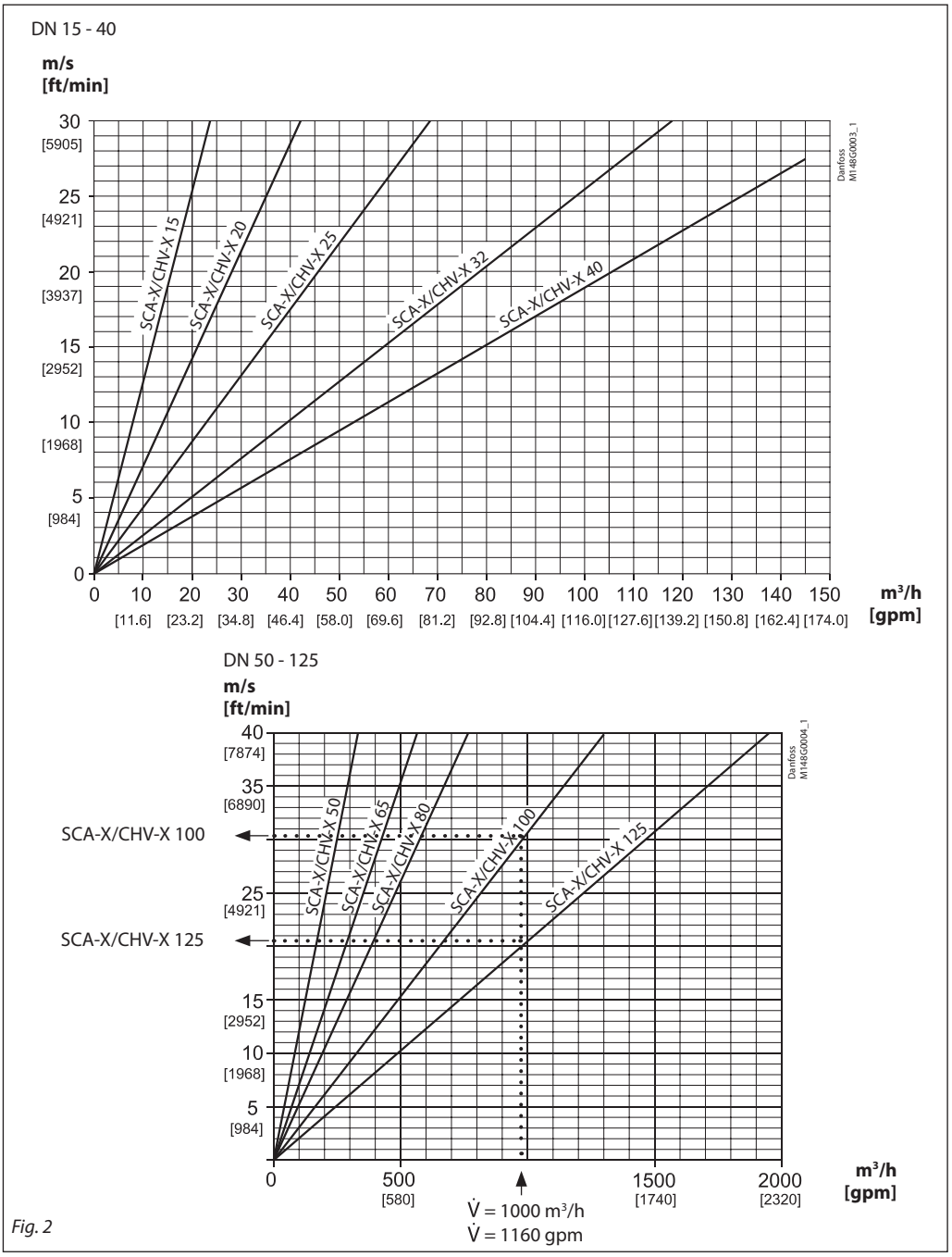

Fig. 2

Material specification

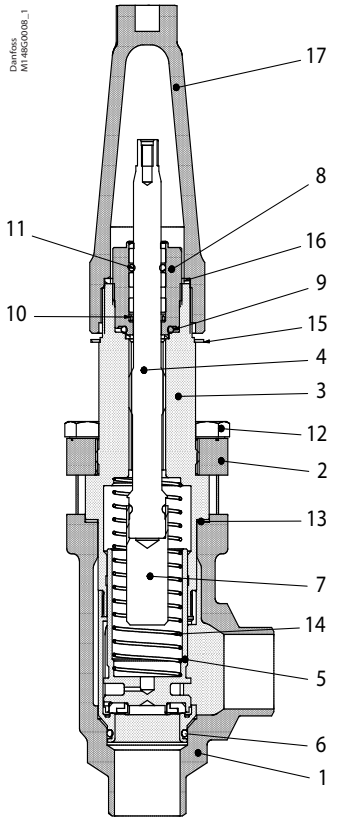

SCA-X 15 - 40

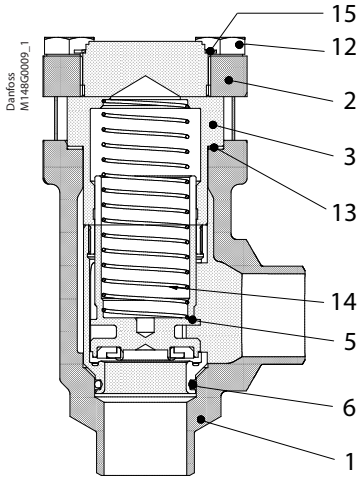

CHV-X 15 - 40

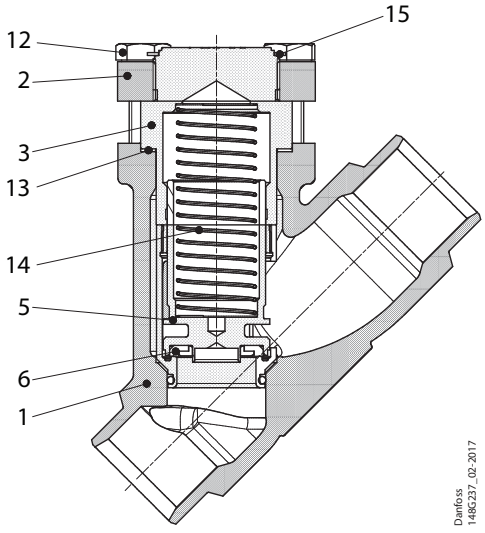

CHV-X 15 - 40

No.	Part	Material	DIN/EN	ISO	ASTM
1	Housing	Steel	P285QH EN10222-4		LF2A350
2	Bonnet, Flange	Steel	P275NL1 EN10028-3		
3	Bonnet, Insert	Steel			
4	Spindle	Stainless steel	X 10CrNiS18-9	Type 17, 17440	AISI 303, 683/13
5	Cone	Steel Teflon (PTFE)			
6	O-ring	Cloroprene (Neoprene)			
7	Spindle extension	Steel			
8	Packing gland O-rings	Steel Cloroprene (Neoprene)			
9	Packing washer	Aluminium			
10	Spring loaded seal	Teflon (PTFE)			
11	O-ring	Cloroprene (Neoprene)			
12	Bolts	Stainless steel	A2-70	A2-70	Type 308
13	Gasket	Fiber, non-asbestos			
14	Spring	Steel			
15	Identification ring	Stainless steel			
16	Seal cap gasket	Nylon			
17	Spindle seal cap	Aluminium			

Material specification

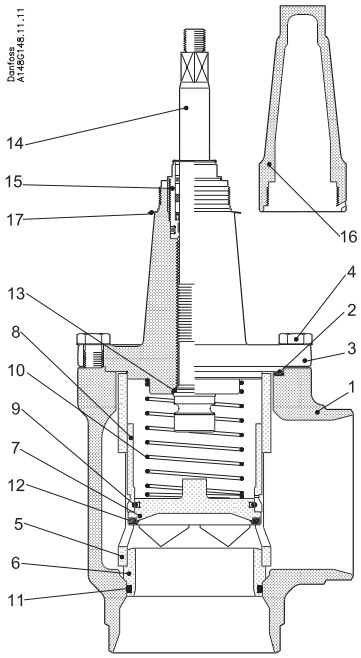

SCA-X 50 - 125

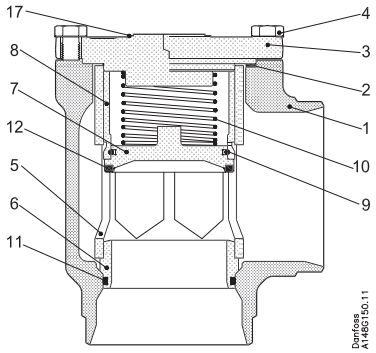

CHV-X 50 - 125

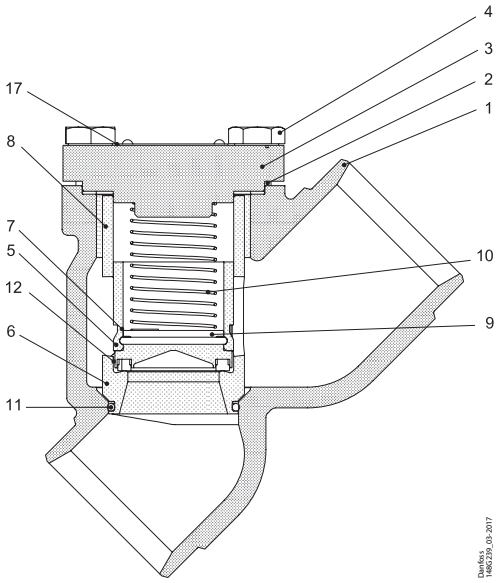

CHV-X 50 - 125

No.	Part	Material	DIN/EN	ISO	ASTM
1	Housing DN 50-65	Steel	P285 QH EN 10222-4		LF2A350
	Housing DN 80-125	Steel	G20Mn5 QT SEW 685		LCC, A352
2	Gasket	Fiber, Non-asbestos			
3	SCA-X: Valve bonnet CHV-X: End cover	Steel	P285 QH EN 10222-4		LF2A350
4	Bolts	Stainless steel	A2-70	A2-70	A-276
5	Tube	Steel			
6	Seat	Steel			
7	Valve plate	Steel			
8	Guide sleeve	Steel			
9	Spring ring	Steel			
10	Spring	Steel			
11	O-ring	Cloroprene (Neoprene)			
12	Teflon ring	Teflon (PTFE)			
13	Soft back seal	Teflon (PTFE)			
14	Spindle DN 50-65	Stainless steel	X8CrNiS18-9 17440	Type 17 R 683/13	AISI 303
	Spindle DN 80-125	Stainless steel	X5CrNi1810 17440	Type 11 683/13	AISI 304 A-276
15	Packing gland	Steel	9Mn28, 1651	Type 2, R 683/9	1213, SAE J403
16	Spindle seal cap and gasket	Aluminium			
17	Marking label	Stainless steel			

Connections

ANSI

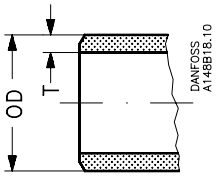

Size mm	Size in.	OD mm	T mm	OD in.	T in.			k_v-angle m^3/h		C_v-angle USgal/min	
Butt-weld ANSI (B 36.10 Schedule 80)											
15	½	21.3	3.7	0.839	0.146			8.0		9.3	
20	¾	26.9	4.0	1.059	0.158			10.0		11.6	
25	1	33.7	4.6	1.327	0.181			24.0		27.8	
32	1¼	42.4	4.9	1.669	0.193			30.0		34.8	
40	1½	48.3	5.1	1.902	0.201			30.0		34.8	
Butt-weld ANSI (B 36.10 Schedule 40)											
50	2	60.3	3.9	2.37	0.15			45		53	
65	2½	73.0	5.2	2.87	0.20			72		85	
80	3	88.9	5.5	3.50	0.22			103		129	
100	4	114.3	6.0	4.50	0.24			196		232	
125	5	141.3	6.6	5.56	0.26			301		356	

SOC

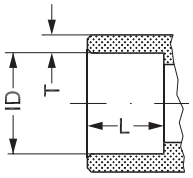

Size mm	Size in.	ID mm	T mm	ID in.	T in.	L mm	L in.				
Socket welding ANSI (B 16.11)											
15	½	21.8	6.0	0.858	0.235	10	0.39				
20	¾	27.2	4.6	1.071	0.181	13	0.51				
25	1	33.9	7.2	1.335	0.284	13	0.51				
32	1¼	42.7	6.1	1.743	0.240	13	0.51				
40	1½	48.8	6.6	1.921	0.260	13	0.51				
50	2	61.2	6.2	2.41	0.24	16	0.63				

Dimensions and weights

SCA-X /CHV-X 15 - 40 (½- 1½ in.)

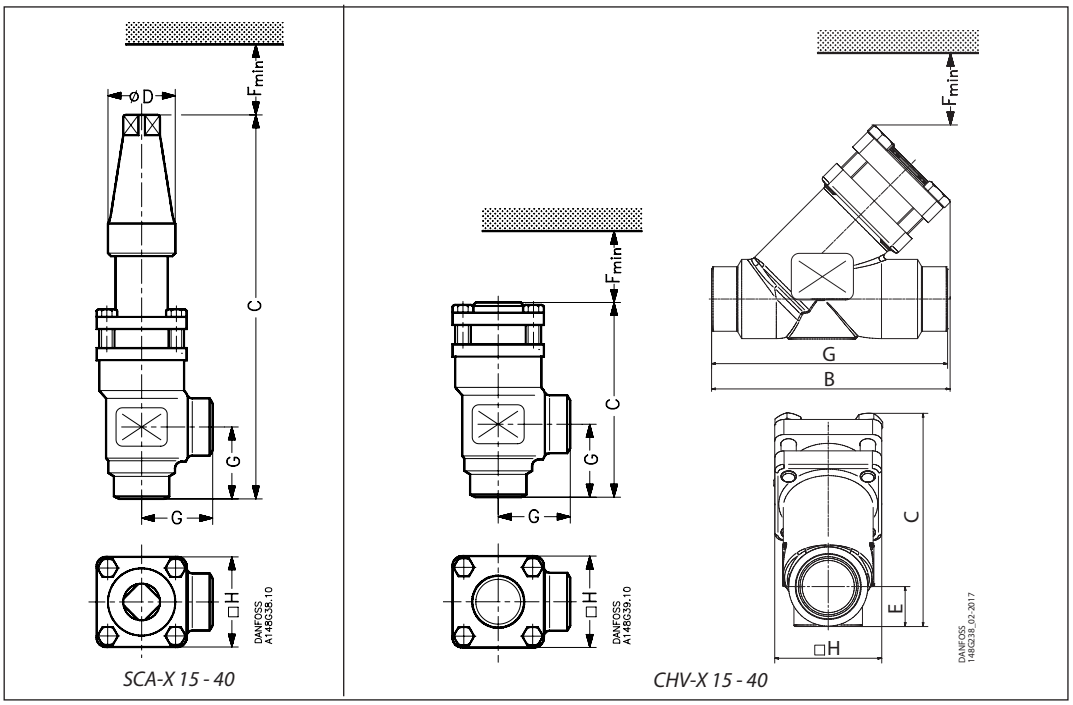

Valve size		C		G		ØD		Fmin		□H	Weight
SCA-X 15 - 40											
SCA-X 15 (½ in.)	mm in.	212 8.35		45 1.77		38 1.50		60 2.36		60 2.36	1.6 kg 3.53 lb
SCA-X 20 (¾ in.)	mm in.	212 8.35		45 1.77		38 1.50		60 2.36		60 2.36	1.6 kg 3.53 lb
SCA-X 25 (1 in.)	mm in.	295 11.61		55 2.17		50 1.97		85 3.35		70 2.76	3.2 kg 7.05 lb
SCA-X 32 (1¼ in.)	mm in.	295 11.61		55 2.17		50 1.97		85 3.35		70 2.76	3.2 kg 7.05 lb
SCA-X 40 (1½ in.)	mm in.	295 11.61		55 2.17		50 1.97		85 3.35		70 2.76	3.2 kg 7.05 lb
CHV-X 15 - 40 Angleway											
CHV-X 15 (½ in.)	mm in.	103 4.06		45 1.77				60 2.36		60 2.36	1.2 kg 2.65 lb
CHV-X 20 (¾ in.)	mm in.	103 4.06		45 1.77				60 2.36		60 2.36	1.2 kg 2.65 lb
CHV-X 25 (1 in.)	mm in.	143 5.63		55 2.17				85 3.35		70 2.76	2.3 kg 5.07 lb
CHV-X 32 (1¼ in.)	mm in.	143 5.63		55 2.17				85 3.35		70 2.76	2.3 kg 5.07 lb
CHV-X 40 (1½ in.)	mm in.	143 5.63		55 2.17				85 3.35		70 2.76	2.3 kg 5.07 lb

Valve size		C	B	E		G		Fmin		□H	Weight
CHV-X 15 - 40 Straightway											
CHV-X 15 (½ in.)	mm in.	99 3.90	114 4.49	19 0.75		120 4.72		60 2.36		60 2.36	1.3kg 2.87lb
CHV-X 20 (¾ in.)	mm in.	99 3.90	114 4.49	19 0.75		120 4.72		60 2.36		60 2.36	1.3kg 2.87lb
CHV-X 25 (1 in.)	mm in.	141 5.55	157 6.18	26 1.02		155 6.10		85 3.35		70 2.76	2.6kg 5.73lb
CHV-X 32 (1¼ in.)	mm in.	141 5.55	157 6.18	26 1.02		155 6.10		85 3.35		70 2.76	2.6kg 5.73lb
CHV-X 40 (1½ in.)	mm in.	141 5.55	157 6.18	26 1.02		155 6.10		85 3.35		70 2.76	2.6kg 5.73lb
CHV-X 32-40 Straightway, Socket weld											
CHV-X 32-40 (1¼ - 1½ in.)	mm in.	132 5.20	156 6.14	26 1.02		155 6.10		85 3.35		70 2.76	2.8kg 6.11lb

Specified weights are approximate values only.

Dimensions and weights

SCA-X/CHV-X 50 - 65 (2 - 2½ in.)

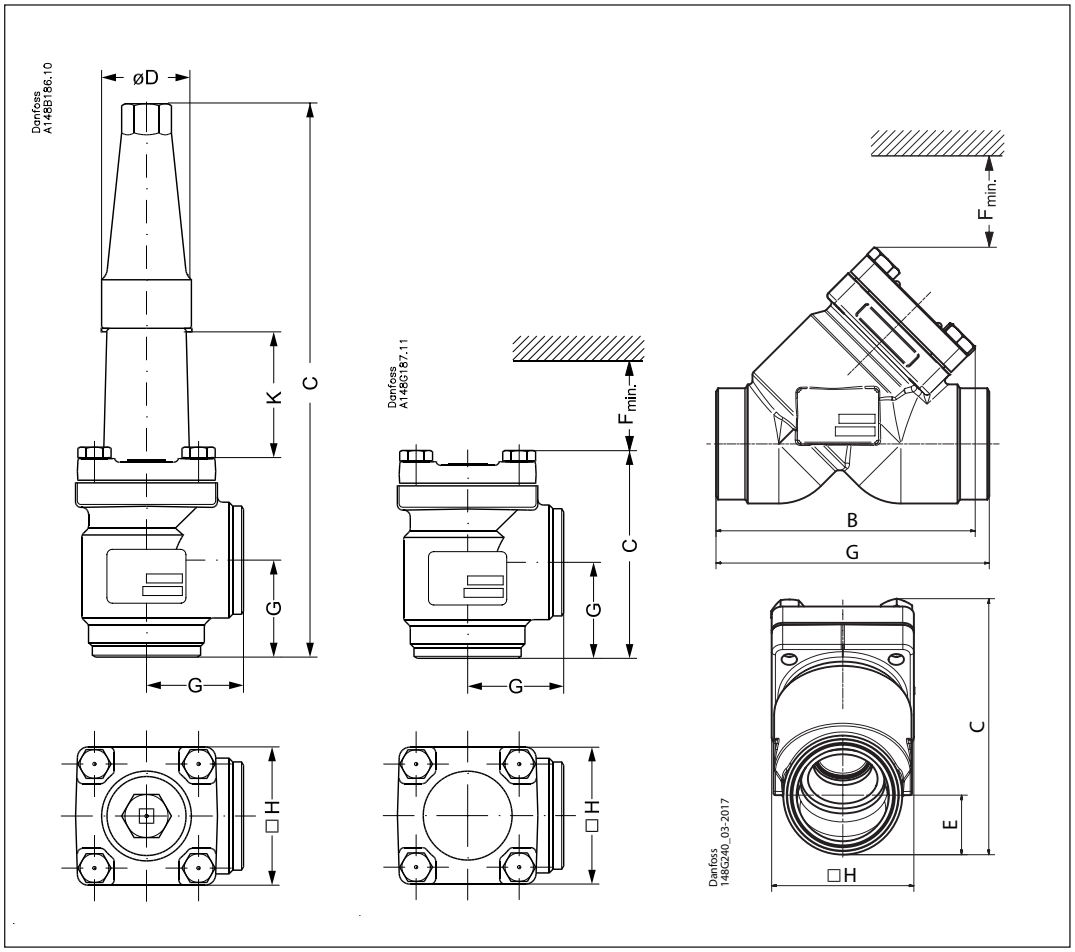

Valve size		K			C			G	∅D	□H		Weight
SCA-X												
SCA-X 50	mm	70			315			60	50	77		3.8 kg
SCA-X (2)	in.	2.76			12.40			2.36	1.97	3.03		8.40 lb
SCA-X 65	mm	70			335			70	50	90		5.5 kg
SCA-X (2½)	in.	2.76			13.19			2.76	1.97	3.54		12.16 lb

Valve size					C			G	$F_{min.}$	□H		Weight
CHV-X Angleway												
CHV-X 50	mm				132			60	92	77		3.2 kg
CHV-X (2)	in.				5.20			2.36	3.62	3.03		7.10 lb
CHV-X 65	mm				152			70	107	90		4.5 kg
CHV-X (2½)	in.				5.98			2.76	4.21	3.54		9.95 lb

Valve size					C	B	E	G	$F_{min.}$	□H		Weight
CHV-X Straightway												
CHV-X 50	mm				139	140	32	148	92	77		3 kg
CHV-X (2)	in.				5.47	5.51	1.26	5.83	3.62	3.03		6.72 lb
CHV-X 65	mm				163	164	40	176	107	90		4.3 kg
CHV-X (2½)	in.				6,4	6,4	1,6	6,9	4.21	3.54		9.44 lb
CHV-X Straightway, Socket weld												
CHV-X 50	mm				142	147	37	162	92	77		3.8 kg
CHV-X (2)	in.				5.59	5.79	1.46	6.38	3.62	3.03		8.33 lb

Specified weights are approximate values only.

Dimensions and weights

SCA-X/CHV-X 80 - 125 (3 - 5 in.)

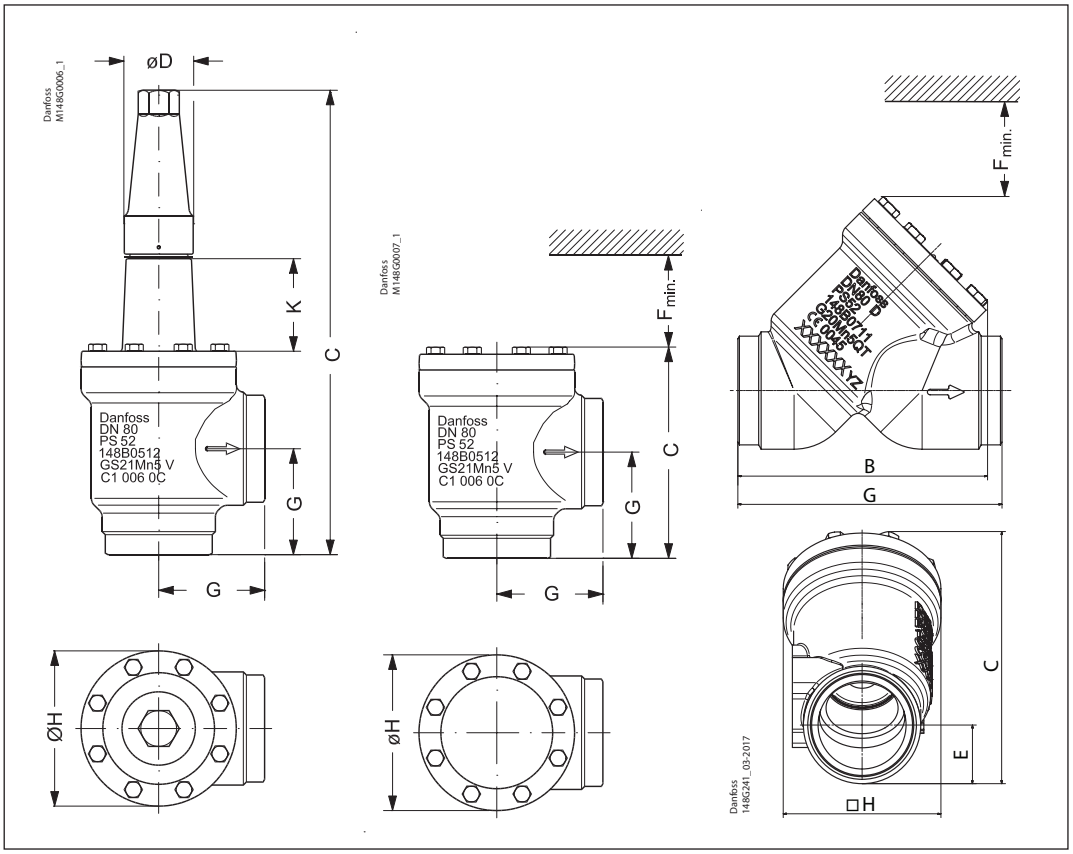

Valve size		K			C			G	∅D		∅H	Weight
SCA-X												
SCA-X 80 SCA-X (3)	mm in.	76 3.00			388 15.28			90 3.54	58 2.28		129 5.08	9.7 kg 21.4 lb
SCA-X 100 SCA-X (4)	mm in.	90 3.54			437 17.20			106 4.17	58 2.28		156 6.14	15.3 kg 33.7 lb
SCA-X 125 SCA-X (5)	mm in.	90 3.54			533 20.98			128 5.04	74 2.91		193 7.60	28.1 kg 61.9 lb

Valve size					C			G		$F_{min.}$	∅H	Weight
CHV-X Angleway												
CHV-X 80 CHV-X (3)	mm in.				189 7.44			90 3.54		133 5.24	129 5.08	8.7 kg 19.23 lb
CHV-X 100 CHV-X (4)	mm in.				223 8.78			106 4.17		163 6.43	156 6.14	14.3 kg 31.60 lb
CHV-X 125 CHV-X (5)	mm in.				268 10.55			128 5.04		190 7.48	193 7.60	25.6 kg 56.58 lb

Valve size					C	B	E	G		$F_{min.}$	∅H	Weight
CHV-X Straightway												
CHV-X 80 CHV-X (3)	mm in.				206 8.11	204 8.03	48 1.89	216 8.50		133 5.24	129 5.08	9.3 kg 20.4 lb
CHV-X 100 CHV-X (4)	mm in.				256 10.08	248 9.76	62 2.44	264 10.39		163 6.43	156 6.14	14.6 kg 32.29 lb
CHV-X 125 CHV-X (5)	mm in.				314 12.36	302 11.89	74 2.91	322 12.68		190 7.48	193 7.60	32.5 kg 71.65 lb

Specified weights are approximate values only.

Ordering complete valves

How to order
The table below is used to identify the valve required.

Please note that the type codes only serve to identify the valves, some of wich may not form part of the standard product range.

For further information please contact your local Danfoss Sales Company.

Valve type	**SCA-X** **CHV-X**	Check & stop valve Check Valve		
(valve size measured on the connection diameter)			**A**	**SOC**
	15	DN 15	x	x
	20	DN 20	x	x
	25	DN 25	x	x
	32	DN 32	x	x
	40	DN 40	x	x
	50	DN 50	x	x
	65	DN 65	x	
	80	DN 80	x	
	100	DN 100	x	
	125	DN 125	x	
Connections	**A**	Welding branches: ANSI B 31.5 schedule 80 DN 15 - 40 (½ - 1½ in.) Welding branches: ANSI B 31.5 schedule 40 DN 50 - 125 (2 - 5 in.)		
	SOC	Socket weld: ANSI B 16.11		
Valve housing	**ANG**	Angle flow		
	STR	Straight flow		

Important!
Where products need to be certified according to specific certification societies, or where higher pressures are required, the relevant information should be included at the time of order.

Angleway

SCA-X Butt-weld ANSI (B 36.10 Schedule 80)

Size		Type	Code No.
mm	in.		
15	½	SCA-X 15 A ANG	**148B5209**
20	¾	SCA-X 20 A ANG	**148B5309**
25	1	SCA-X 25 A ANG	**148B5409**
32	1¼	SCA-X 32 A ANG	**148B5509**
40	1½	SCA-X 40 A ANG	**148B5609**

SCA-X Butt-weld ANSI (B 36.10 Schedule 40)

Size		Type	Code No.
mm	in.		
50	2	SCA-X 50 A ANG	**148B5703**
65	2½	SCA-X 65 A ANG	**148B5802**
80	3	SCA-X 80 A ANG	**148B5903**
100	4	SCA-X 100 A ANG	**148B6004**
125	5	SCA-X 125 A ANG	**148B6103**

SCA-X Socket welding ANSI (B 16.11)

Size		Type	Code No.
mm	in.		
50	2	SCA-X 50 SOC ANG	**148B5704**

Angleway

CHV-X Butt-weld ANSI (B 36.10 Schedule 80)

Size		Type	Code No.
mm	in.		
15	½	CHV-X 15 A ANG	**148B5237**
20	¾	CHV-X 20 A ANG	**148B5337**
25	1	CHV-X 25 A ANG	**148B5437**
32	1¼	CHV-X 32 A ANG	**148B5537**
40	1½	CHV-X 40 A ANG	**148B5637**

CHV-X Butt-weld ANSI (B 36.10 Schedule 40)

Size		Type	Code No.
mm	in.		
50	2	CHV-X 50 A ANG	**148B5737**
65	2½	CHV-X 65 A ANG	**148B5837**
80	3	CHV-X 80 A ANG	**148B5937**
100	4	CHV-X 100 A ANG	**148B6037**
125	5	CHV-X 125 A ANG	**148B6137**

CHV-X Socket welding ANSI (B 16.11)

Size		Type	Code No.
mm	in.		
32	1¼	CHV 32 SOC ANG	**148B5539**
50	2	CHV 50 SOC ANG	**148B5740**

ANG = Angleway

Ordering complete valves
(continued)

Straightway

CHV-X Butt-weld ANSI (B 36.10 Schedule 80)

Size		Type	Code No.
mm	in.		
15	½	CHV-X 15 A STR	**148B6582**
20	¾	CHV-X 20 A STR	**148B6584**
25	1	CHV-X 25 A STR	**148B6586**
32	1¼	CHV-X 32 A STR	**148B6588**
40	1½	CHV-X 40 A STR	**148B6590**

CHV-X Butt-weld ANSI (B 36.10 Schedule 40)

Size		Type	Code No.
mm	in.		
50	2	CHV-X 50 A STR	**148B6592**
65	2½	CHV-X 65 A STR	**148B6594**
80	3	CHV-X 80 A STR	**148B6596**
100	4	CHV-X 100 A STR	**148B6598**
125	5	CHV-X 125 A STR	**148B6600**

CHV-X Socket welding ANSI (B 16.11)

Size		Type	Code No.
mm	in.		
15	½	CHV-X 15 SOC STR	**148B6601**
20	¾	CHV-X 20 SOC STR	**148B6602**
25	1	CHV-X 25 SOC STR	**148B6603**
32	1¼	CHV-X 32 SOC STR	**148B6604**
40	1½	CHV-X 40 SOC STR	**148B6605**
50	2	CHV-X 50 SOC STR	**148B6606**

STR = Straightway

Ordering SVA-X from the parts programme

Example
(select from table 1 and 2)

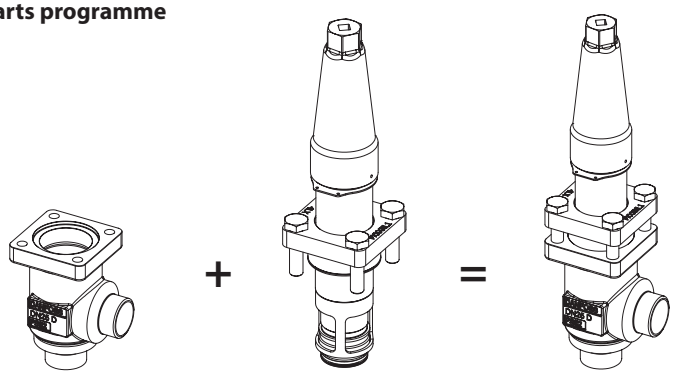

Valve housing, size 25 (1 in.), ANSI butt weld, angleway, **148B5454**
Table 1

Top part, SCA-X size 25 (1 in.) **148B5482**
Table 2

Table 1
SVL valve housings w/different connections

	DN 15-65 mm (½ - 2½ in.)				*DN 80-125 mm (3 - 5 in.)*		
	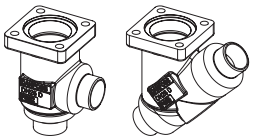				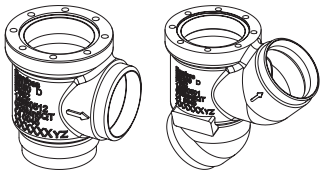		
Sizes [DN]	**Valve Housing SVL**						
	ANSI-Butt weld		**SOC**		**FPT**		
mm	**in.**	**ANG**	**STR**	**ANG**	**STR**	**ANG**	**STR**
15	½	**148B5254**	**148B5255**	**148B5256**	**148B5257**	**148B5258**	**148B5259**
20	¾	**148B5354**	**148B5355**	**148B5356**	**148B5357**	**148B5358**	**148B5359**
25	1	**148B5454**	**148B5455**	**148B5456**	**148B5457**	**148B5458**	**148B5459**
32	1¼	**148B5578**	**148B5579**	**148B5580**	**148B5581**	**148B5582**	**148B5583**
40	1½	**148B5654**	**148B5655**	**148B5656**	**148B5657**		
50	2	**148B5743**	**148B5744**	**148B5745**	**148B5746**		
65	2½	**148B5818**	**148B5819**				
80	3	**148B5914**	**148B5915**				
100	4	**148B6016**	**148B6017**				
125	5	**148B6114**	**148B6115**				

Table 2
SCA-X complete top part including gaskets and bolts

	SCA-X 15-50	SCA-X 80-125
	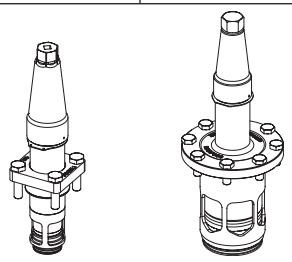	
Sizes [DN]	**Complete top part**	
mm	**in.**	**SCA-X**
15	½	**148B5282**
20	¾	
25	1	**148B5482**
32	1¼	
40	1½	
50	2	**148B5735**
65	2½	**148B5825**
80	3	**148B5918**
100	4	**148B6019**
125	5	**148B6118**

Ordering CHV-X from the parts programme

Example
(select from table 1 and 2)

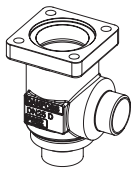

Valve housing, size 25 (1 in.), ANSI butt weld, angleway,
148B5454
Table 1

+

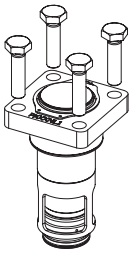

Top part, CHV-X size 25 (1 in.)
148B5483
Table 2

=

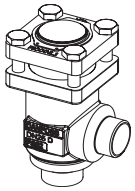

Table 1
SVL valve housings w/different connections

	DN 15-65 mm (½ - 2½ in.)			*DN 80-125 mm (3 - 5 in.)*		
	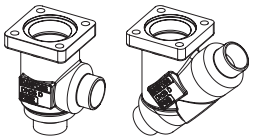			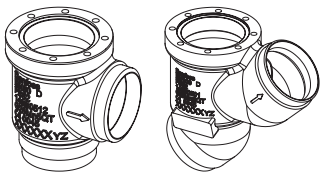		
Sizes [DN]	**Valve Housing SVL**					
	ANSI-Butt weld		**SOC**		**FPT**	
mm / **in.**	**ANG**	**STR**	**ANG**	**STR**	**ANG**	**STR**
15 / ½	**148B5254**	**148B5255**	**148B5256**	**148B5257**	**148B5258**	**148B5259**
20 / ¾	**148B5354**	**148B5355**	**148B5356**	**148B5357**	**148B5358**	**148B5359**
25 / 1	**148B5454**	**148B5455**	**148B5456**	**148B5457**	**148B5458**	**148B5459**
32 / 1¼	**148B5578**	**148B5579**	**148B5580**	**148B5581**	**148B5582**	**148B5583**
40 / 1½	**148B5654**	**148B5655**	**148B5656**	**148B5657**		
50 / 2	**148B5743**	**148B5744**	**148B5745**	**148B5746**		
65 / 2½	**148B5818**	**148B5819**				
80 / 3	**148B5914**	**148B5915**				
100 / 4	**148B6016**	**148B6017**				
125 / 5	**148B6114**	**148B6115**				

Table 2
CHV-X complete top part including gaskets and bolts

	CHV-X 15-50	CHV-X 80-125
	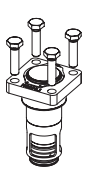	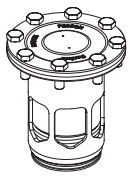
Sizes [DN]	**Complete top part**	
mm / **in.**	**CHV-X**	
15 / ½	**148B5283**	
20 / ¾		
25 / 1	**148B5483**	
32 / 1¼		
40 / 1½		
50 / 2	**148B5747**	
65 / 2½	**148B5827**	
80 / 3	**148B5919**	
100 / 4	**148B6022**	
125 / 5	**148B6119**	

Danfoss can accept no responsibility for possible errors in catalogues, brochures and other printed material. Danfoss reserves the right to alter its products without notice. This also applies to products already on order provided that such alterations can be made without subsequential changes being necessary in specifications already agreed.
All trademarks in this material are property of the respective companies. Danfoss and the Danfoss logotype are trademarks of Danfoss A/S. All rights reserved.