ENGINEERING
TOMORROW

Data sheet

Strainer
Type FIA

FIA strainers are a range of angleway and straightway strainers, which are carefully designed to give favourable flow conditions. The design makes the strainer easy to install, and ensures quick strainer inspection and cleaning.

FIA strainers are used ahead of automatic controls, pumps, compressors etc., for initial plant start-up and where permanent filtration of the refrigerant is required. The strainer reduces the risk of undesirable system breakdowns and reduces wear and tear on plant components.

FIA strainers are equipped with a screen mesh of stainless steel, available in sizes 100, 150, 250 and 500µ (microns*), (US 150, 100, 72, 38 mesh*).

* Mesh is the number of threads per inch.
µ (microns) is the distance between two threads
(1µ = 1 /1000 mm).

Features

- Applicable to HCFC, HFC, R717 (Ammonia), R744 (CO_2) and all flammable refrigerants.
- Modular Concept:
  – Each valve housing is available with several different connection types and sizes.
  – Possible to convert FIA strainers to any other product in the Flexline™ SVL family (shut-off valve, hand operated regulating valve, check & stop valve or check valve) just by replacing the complete top part.
- Fast and easy overhaul service. It is easy to replace the top part and no welding is needed.
- Filter net of stainless steel mounted direct without extra gaskets means easy servicing.
- Two types of strainer inserts are available:
  - A plain insert of stainless steel.
  - A pleated insert (DN 15-200) with extra large surface, which ensures long intervals between cleaning and low pressure drop.
- FIA 15-40 (½ – 1 ½ in.):
  A special insert (50µ) can be used in combination with a standard version when cleaning a plant during commissioning.
- FIA 50-200 (2 - 8 in.):
  A large capacity filter bag (50µ) can be inserted for cleaning plant during commissioning.
- FIA 80-200 (3 - 8 in.) can be equipped with a magnetic insert for detention of iron particles and other magnetic particles.
- Each strainer clearly marked with type, size and performance range
- Housing and bonnet of low temperature steel in accordance with the requirements of the Pressure Equipment Directive and those of other international classification authorities
- Temperature range:
  –60/+150°C (–76/+302°F)
- Max. working pressure:
  52 bar g (754 psi g)
- Classification: DNV, CRN, BV, EAC etc.
  To get an updated list of certification on the products please contact your local Danfoss Sales Company.

Design

Connections
Available with the following connections:

- Butt-weld ANSI (B 36.10 Schedule 80), DN 15 - 40 (½ - 1½ in.)
- Butt-weld ANSI (B 36.10 Schedule 40), DN 50 - 200 (2 - 8 in.)
- Socket Weld (ANSI B 16.11), DN 15 - 50 (½ - 2 in.)
- FPT Female Pipe Thread, NPT (ANSI/ASME B 1.20.1), DN 15 - 32 (½ - 1¼ in.)

Strainer Insert
A filter grid and filter net of stainless steel ensure long element life. The filter net offers a very high degree of cleanability.

Housing
The strainer housing is made of special, cold resistant steel.

Pressure Equipment Directive (PED)
FIA strainers are approved in accordance with the European standard specified in the Pressure Equipment Directive and are CE marked.
For further details / restrictions - see Installation Instruction

Nominal bore	DN ≤ 25 (1 in.)	DN 32-80 mm (1¼ - 3 in.)	DN 100-200 mm (4-8 in.)
Classified for	Fluid group I		
Category	Article 3, paragraph 3	II	III

Installation/Maintenance
The strainer is designed to resist high internal pressures. However, the piping system in general should be designed to avoid liquid traps and reduce the risk of hydraulic pressure caused by thermal expansion.

Install the strainer with the cover in downward position.

Danfoss recommends replacement/cleaning of the strainer when the differential pressure loss >0.5 bar (7.3 psi) in the liquid line and >0.05 bar (0.7 psi) in the suction line. The max. permissible differential pressure is 1 bar (15 psi).

For further information refer to installation instruction for FIA.

Identification:

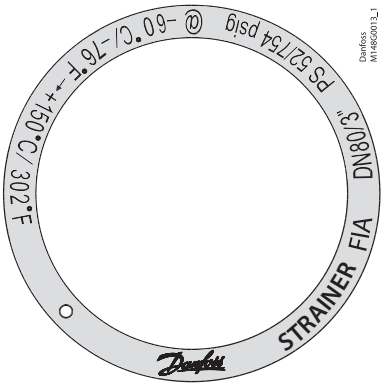

Example of marking ring, FIA

Technical data

- *Refrigerants*
  Applicable to HCFC, HFC, R717 (Ammonia), R744 (CO_2) and all flammable refrigerants.
- *Temperature range*
  –60°C/+150°C (–76°F/+302°F).
- *Max. working pressure:*
  52 bar g (754 psi g).

Selection of strainer size

The mesh aperture size of the strainer must satisfy the requirements stated by the suppliers of the equipment to be protected.

The following recommendations of aperture size apply in general to refrigeration installations:

All lines
First start up: **50**µ
(Use strainer insert with removable insert for FIA DN15-40 or separate filter bag for FIA DN 50-200. 50µ insert should normally be removed after the first 24 hours of operation)

Liquid Lines
Ahead of pumps: ..... **500**µ [38 mesh]
After pumps: ..... **150**µ [100 mesh] / 250µ [72 mesh]
In front of AKVA valves ..... **100**µ [150 mesh]

Protection of automatic regulation equipment
Generally ..... **150**µ [100 mesh] / 250µ [72 mesh]
Sensitive equipment, e.g.
suction regulators with low temperature ..... **250**µ [72 mesh]

Suction Lines
Ahead of screw compressor ..... **250**µ [72 mesh]
Ahead of piston compressor ..... **150**µ [100 mesh]

Definition
Mesh is the number of threads per inch. µ (microns) is the distance between two threads (1µ = 1 /1000 mm).

Flow coefficient (DIN/ANSI)

Connection size (DN) **FIA**	µ	**mesh**	**wire** mm	**wire** in.	**free space** %	**screen area** Plain inserts cm²	Plain inserts in²	Pleated inserts cm²	Pleated inserts in²
15 - 20 (½" - ¾")	100		0.068	0.003	35	25	3.9	45	7.0
	150	100	0.10	0.004	36	25	3.9	45	7.0
	250	72	0.10	0.004	51	25	3.9	45	7.0
	500	38	0.16	0.006	57.6	25	3.9	45	7.0
25 - 40 (1" - 1½")	100		0.068	0.003	35	71	11	160	25.0
	150	100	0.10	0.004	36	71	11	160	25.0
	250	72	0.10	0.004	51	71	11	160	25.0
	500	38	0.16	0.006	57.6	71	11	160	25.0
50 (2")	100		0.068	0.003	35	71	11	200	31.2
	150	100	0.10	0.004	36	87	13.5	200	31.2
	250	72	0.10	0.004	51	87	13.5	200	31.2
	500	38	0.16	0.006	57.6	87	13.5	200	31.2
65 (2½")	150	100	0.10	0.004	36	127	19.7	305	47.6
	250	72	0.10	0.004	51	127	19.7	305	47.6
	500	38	0.16	0.006	57.6	127	19.7	305	47.6
80 (3")	150	100	0.10	0.004	36	205	31.8	450	70.2
	250	72	0.10	0.004	51	205	31.8	450	70.2
	500	38	0.16	0.006	57.6	205	31.8	450	70.2
100 (4")	150	100	0.10	0.004	36	370	57.4	790	123.2
	250	72	0.10	0.004	51	370	57.4	790	123.2
	500	38	0.16	0.006	57.6	370	57.4	790	123.2
125 (5")	150	100	0.10	0.004	36	510	79.1	1105	172.4
	250	72	0.10	0.004	51	510	79.1	1105	172.4
	500	38	0.16	0.006	57.6	510	79.1	1105	172.4
150 (6")	150	100	0.10	0.004	36	726	112.5	1600	249.6
	250	72	0.10	0.004	51	726	112.5	1600	249.6
	500	38	0.16	0.006	57.6	726	112.5	1600	249.6
200 (8")	150	100	0.10	0.004	36	1315	203.8	2900	453.1
	250	72	0.10	0.004	51	1315	203.8	2900	453.1
	500	38	0.16	0.006	57.6	1315	203.8	2900	453.1

Selection of strainer size
(Continued)

K_v values

DN	FIA angle - plain filter net				FIA angle - pleated filter net		
	µ100	µ150	µ250	µ500	µ150	µ250	µ500
15	3.3	3.4	3.5	3.7	4.2		
20	6.9	7.1	7.3	7.7	8.8		
25	13.8	14.0	14.5	15.2	17.2	17.9	
32	23.0	23.8	24.7	25.5	29.2	30.5	
40	25.1	25.5	26.4	28.1	31.4	32.6	
50	45.1	45.9	47.6	50.2	56.7	58.8	62.0
65		56.1	57.8	60.4	69.3	71.4	74.6
80		104.6	108.0	113.1	129.2	133.4	139.7
100		162.4	167.5	176.0	200.6	206.9	217.4
125		275.4	283.9	298.4	340.2	350.7	368.6
150		362.1	373.2	391.9	447.3	462.9	
200		572.9	590.8	620.5	704.9	730.0	

DN	FIA straight - plain filter net				FIA straight - pleated filter net		
	µ100	µ150	µ250	µ500	µ150	µ250	µ500
15	2.5	2.6	2.7	2.8	3.3		
20	5.3	5.4	5.6	5.9	6.9		
25	10.5	10.7	11.1	11.6	13.8	14.5	
32	17.6	18.2	18.9	19.5	23.9	24.7	
40	19.2	19.5	20.2	21.5	25.5	26.4	
50	34.5	35.1	36.4	38.4	45.9	47.6	50.2
65		42.9	44.2	46.2	56.1	57.8	60.4
80		80.0	82.6	86.5	104.6	108.0	113.1
100		124.2	128.1	134.6	162.4	167.5	176.0
125		210.6	217.1	228.2	275.4	283.9	298.4
150		276.9	285.4	299.7	362.1	374.0	
200		438.1	451.8	474.5	570.8	587.3	

Material specification

FIA 15 - 40 (½ in. - 1 ½ in.)

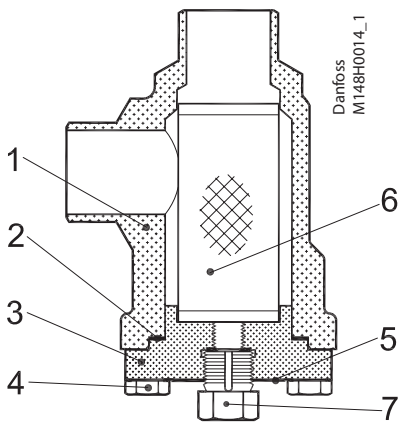

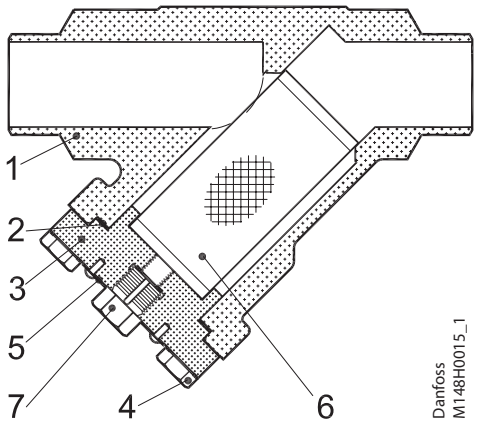

FIA 15-40 (½ in. - 1½ in.)

No.	Part	Material	DIN	ISO	ASTM
1	Housing	Steel	G20Mn5QT, 10213-3 ---------- P285QH+QT, 10222-4		LCC, A352 ---------- LF2, A350
2	Gasket	Fibre, Non-asbestos			
3	Cover	Steel	P285QH EN10222-4 ---------- P275NL1 or 2 EN10028-3		LF2, A350 ---------- A, A662
4	Bolts	Stainless steel	A2-70	A2-70	Type 308
5	Marking label	Aluminium			
6	Strainer insert	Stainless steel			
7	Pressure relief (screw)	Stainless steel			

Material specification

FIA 50 - 200 (2 in. - 8 in.)

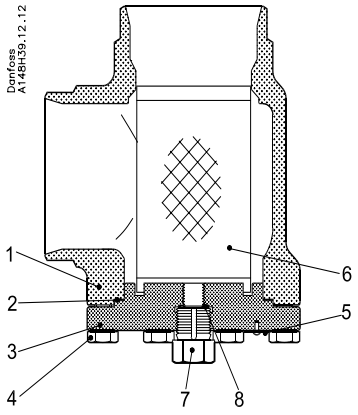

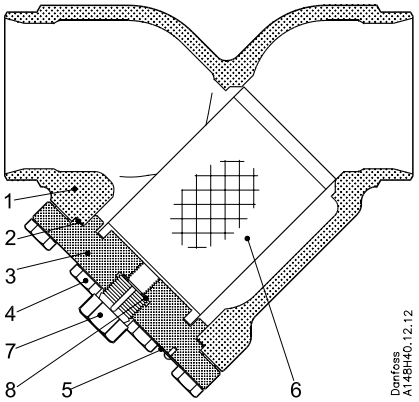

FIA 50-200 (2 in. - 8 in.)

No.	Part	Material	DIN	ISO	ASTM
1	Housing	Steel	G20Mn5QT, 10213-3 ---------- P285QH+QT, 10222-4		LCC, A352 ---------- LF2, A350
2	Gasket	Fibre, Non-asbestos			
3	Cover	Steel	P285QH EN10222-4 ---------- P275NL1 or 2 EN10028-3		LF2, A350 ---------- A, A662
4	Bolts	Stainless steel	A2-70	A2-70	Type 308
5	Marking label	Aluminium			
6	Strainer insert	Stainless steel			
7	Pressure relief (screw)	Stainless steel			
8*	Packing washer	Aluminium			

* pos 8 used in FIA 50-200

Connections

ANSI

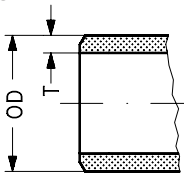

Size mm	Size in.	OD mm	T mm	OD in.	T in.
Butt-weld ANSI (B 36.10 Schedule 80)					
15	½	21.3	3.7	0.839	0.146
20	¾	26.9	4.0	1.059	0.158
25	1	33.7	4.6	1.327	0.181
32	1¼	42.4	4.9	1.669	0.193
40	1½	48.3	5.1	1.902	0.201
Butt-weld ANSI (B 36.10 Schedule 40)					
50	2	60.3	3.9	2.37	0.15
65	2½	73.0	5.2	2.87	0.20
80	3	88.9	5.5	3.50	0.22
100	4	114.3	6.0	4.50	0.24
125	5	141.3	6.6	5.56	0.26
150	6	168.3	7.1	6.63	0.28
200	8	219.1	8.2	8.63	0.32

SOC

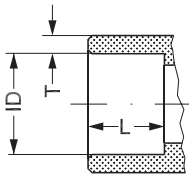

Size mm	Size in.	ID mm	T mm	ID in.	T in.
Socket welding ANSI (B 16.11)					
15	½	21.8	6.0	0.858	0.235
20	¾	27.2	4.6	1.071	0.181
25	1	33.9	7.2	1.335	0.284
32	1¼	42.7	6.1	1.743	0.240
40	1½	48.8	6.6	1.921	0.260
50	2	61.2	6.2	2.41	0.24

FPT

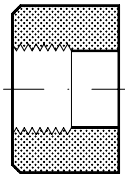

Size mm	Size in.	Inside pipe tread
FPT inside pipe thread, NPT (ANSI/ASME B 1.20.1)		
15	½	(½ × 14 NPT)
20	¾	(¾ × 14 NPT)
25	1	(1 × 11.5 NPT)
32	1¼	(1¼ × 11.5 NPT)

Dimensions and weights

FIA 15 - 65

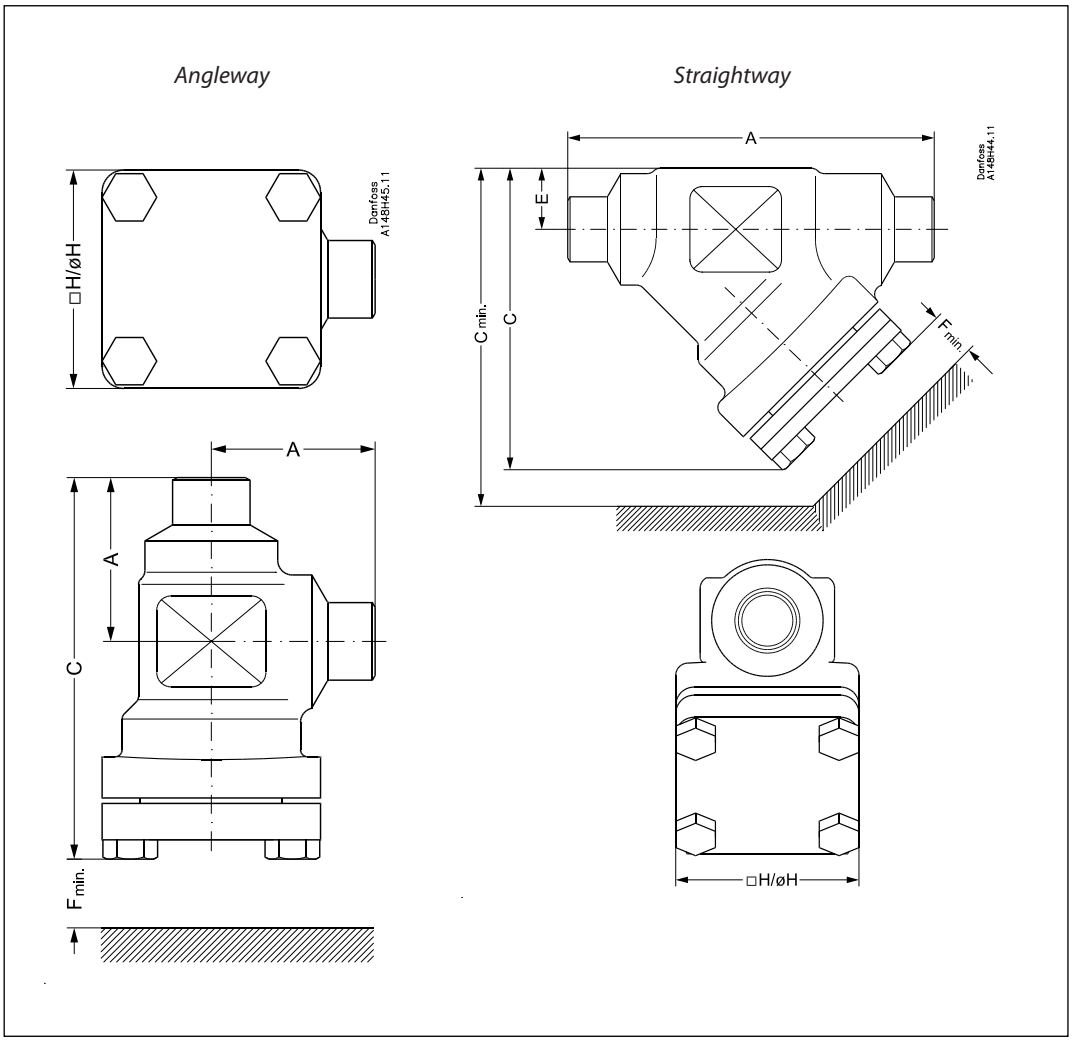

Angleway

Strainer size		A	C	H	$F_{min.}$	Weight
FIA 15-20	mm	45	105	60	68	1.1 kg
(½" - ¾")	in.	1.77	4.13	2.36	2.68	2.4 lbs
FIA 25-40	mm	55	132	70	95	1.7 kg
(1" - 1½")	in.	2.17	5.20	2.76	3.74	3.7 lbs
FIA 50	mm	60	132	77	92	2.8 kg
(2")	in.	2.36	5.20	3.03	3.62	6.2 lbs
FIA 65	mm	70	152	90	107	3.8 kg
(2½")	in.	2.76	5.98	3.54	4.21	8.4 lbs

Straightway

Strainer size		A	C	$C_{min.}$	H	E	$F_{min.}$	Weight
FIA 15-20	mm	120	99	133	60	20	68	1.4 kg
(½" - ¾")	in.	4.72	3.90	5.24	2.36	0.79	2.68	3.1 lbs
FIA 25-40	mm	155	129	177	70	26	95	2.4 kg
(1" - 1½")	in.	6.10	5.08	6.97	2.76	1.02	3.74	5.3 lbs
FIA 50	mm	148	138	184	77	32	92	3.5 kg
(2")	in.	5.83	5.43	7.24	3.03	1.26	3.62	7.7 lbs
FIA 65	mm	176	165	219	90	40	107	5.3 kg
(2½")	in.	6.93	6.50	8.62	3.54	1.57	4.21	11.7 lbs

Dimensions and weights

FIA 80 - 200

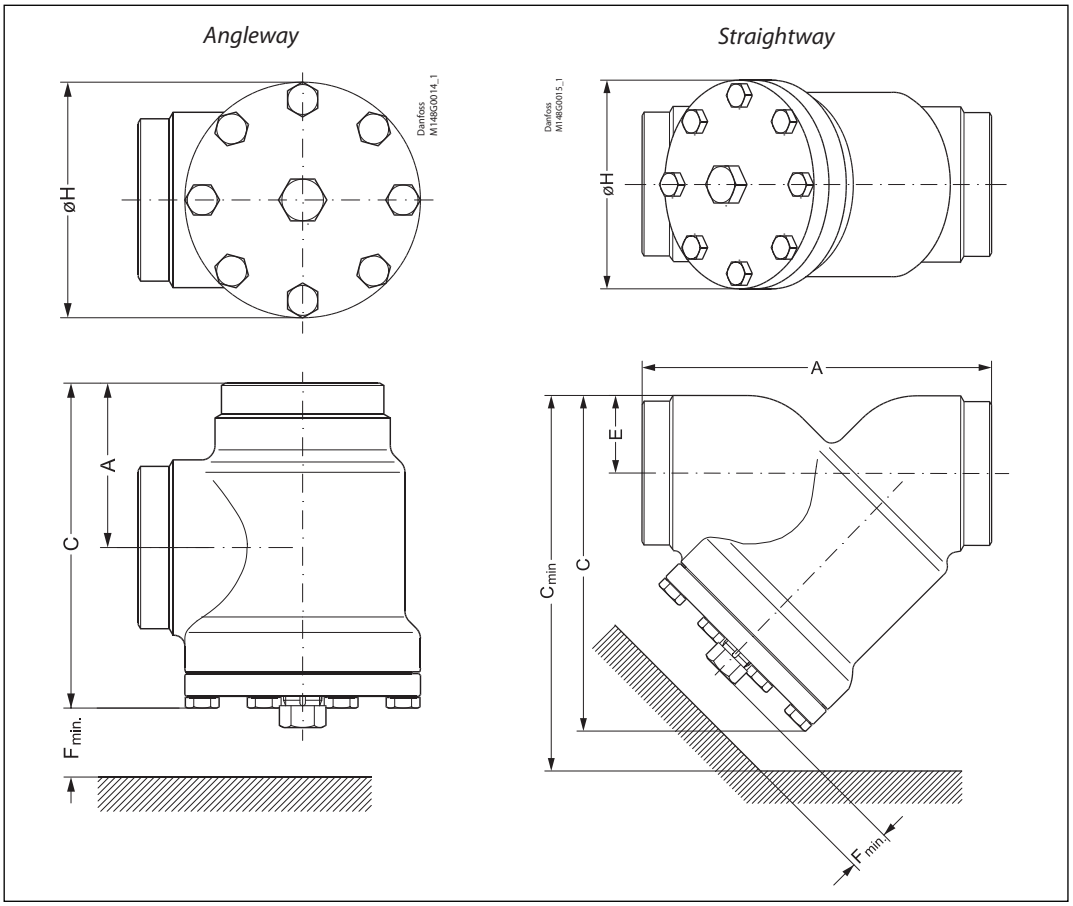

Angleway

Strainer size		A	C	H	$F_{min.}$	Weight
FIA 80	mm	90	189	129	133	7.3 kg
(3")	in.	3.54	7.44	5.08	5.24	16.1 lbs
FIA 100	mm	106	223	156	163	11.9 kg
(4")	in.	4.17	8.78	6.14	6.42	26.2 lbs
FIA 125	mm	128	268	192	190	21.2 kg
(5")	in.	5.04	10.6	7.56	7.48	46.7 lbs
FIA 150	mm	145	303	219	223	30.5 kg
(6")	in.	5.71	11.93	8.62	8.78	67.2 lbs
FIA 200	mm	180	372	276	280	68 kg
(8")	in.	7.09	14.65	10.87	11.02	150 lbs

Straightway

Strainer size		A	C	$C_{min.}$	H	E	$F_{min.}$	Weight
FIA 80	mm	216	204	271	129	48	133	8.6 kg
(3")	in.	8.50	8.03	10.67	5.08	1.89	5.24	19 lbs
FIA 100	mm	264	256	337	156	60	163	14.9 kg
(4")	in.	10.39	10.08	13.27	6.14	2.36	6.42	32.8 lbs
FIA 125	mm	322	313	408	192	74	190	26.9 kg
(5")	in.	12.68	12.32	16.06	7.56	2.91	7.48	59.3 lbs
FIA 150	mm	370	370	482	219	91	223	51 kg
(6")	in.	14.57	14.57	18.98	8.62	3.58	8.78	112 lbs
FIA 200	mm	464	465	605	276	117	280	95 kg
(8")	in.	18.27	18.31	23.82	10.87	4.61	11.02	209 lbs

Ordering

The table below is used to identify the strainer required. Please note that you have to order **FIA strainer without insert, a strainer insert** and **accessories.**

Size mm	Size in.	Type	FIA Without strainer insert	Strainer insert 100µ 150 mesh	Strainer insert 150µ 100 mesh	Strainer insert 250µ 72 mesh	Strainer insert 500µ 38 mesh	Pleated Strainer insert 150µ 100 mesh	Pleated Strainer insert 250µ 72 mesh	Pleated Strainer insert 500µ 38 mesh
Butt-weld ANSI (B 36.10 Schedule 80) - Angleway										
15	½	FIA 15 A ANG	**148B5244**	**148H3122**	**148H3124**	**148H3126**	**148H3128**	**148H3303**	**148H3363**	-
20	¾	FIA 20 A ANG	**148B5344**							
25	1	FIA 25 A ANG	**148B5444**	**148H3123**	**148H3125**	**148H3127**	**148H3129**	**148H3304**	**148H3269**	-
32	1¼	FIA 32 A ANG	**148B5545**							
40	1½	FIA 40 A ANG	**148B5642**							
Butt-weld ANSI (B 36.10 Schedule 80) - Straightway										
15	½	FIA 15 A STR	**148B5247**	**148H3122**	**148H3124**	**148H3126**	**148H3128**	**148H3303**	**148H3363**	-
20	¾	FIA 20 A STR	**148B5347**							
25	1	FIA 25 A STR	**148B5447**	**148H3123**	**148H3125**	**148H3127**	**148H3129**	**148H3304**	**148H3269**	-
32	1¼	FIA 32 A STR	**148B5552**							
40	1½	FIA 40 A STR	**148B5644**							
Butt-weld ANSI (B 36.10 Schedule 40) - Angleway										
50	2	FIA 50 A ANG	**148B5714**	**148H3157**	**148H3130**	**148H3138**	**148H3144**	**148H3179**	**148H3184**	**148H3189**
65	2½	FIA 65 A ANG	**148B5814**	-	**148H3131**	**148H3139**	**148H3145**	**148H3180**	**148H3185**	**148H3190**
80	3	FIA 80 A ANG	**148B5907**	-	**148H3119**	**148H3120**	**148H3121**	**148H3181**	**148H3186**	**148H3191**
100	4	FIA 100 A ANG	**148B6008**	-	**148H3132**	**148H3140**	**148H3146**	**148H3182**	**148H3187**	**148H3192**
125	5	FIA 125 A ANG	**148B6107**	-	**148H3133**	**148H3141**	**148H3147**	**148H3183**	**148H3188**	**148H3193**
150	6	FIA 150 A ANG	**148B6204**	-	**148H3134**	**148H3142**	**148H3148**	**148H3226**	**148H3293***	-
200	8	FIA 200 A ANG	**148B6304**	-	**148H3135**	**148H3143**	**148H3149**	**148H3297**	**148H3294***	-
Butt-weld ANSI (B 36.10 Schedule 40) - Straightway										
50	2	FIA 50 A STR	**148B5716**	**148H3157**	**148H3130**	**148H3138**	**148H3144**	**148H3179**	**148H3184**	**148H3189**
65	2½	FIA 65 A STR	**148B5815**	-	**148H3131**	**148H3139**	**148H3145**	**148H3180**	**148H3185**	**148H3190**
80	3	FIA 80 A STR	**148B5908**	-	**148H3119**	**148H3120**	**148H3121**	**148H3181**	**148H3186**	**148H3191**
100	4	FIA 100 A STR	**148B6009**	-	**148H3132**	**148H3140**	**148H3146**	**148H3182**	**148H3187**	**148H3192**
125	5	FIA 125 A STR	**148B6108**	-	**148H3133**	**148H3141**	**148H3147**	**148H3183**	**148H3188**	**148H3193**
150	6	FIA 150 A STR	**148B6205**	-	**148H3134**	**148H3142**	**148H3148**	**148H3226**	**148H3293***	-
200	8	FIA 200 A STR	**148B6305**	-	**148H3135**	**148H3143**	**148H3149**	**148H3297**	**148H3294***	-

A = Butt-weld ANSI

ANG = Angleway

STR = Straightway

* 60 mesh

Ordering *(continued)*

Size mm	Size in.	Type	FIA Without strainer insert	Strainer insert 100µ 150 mesh	Strainer insert 150µ 100 mesh	Strainer insert 250µ 72 mesh	Strainer insert 500µ 38 mesh	Pleated Strainer insert 150µ 100 mesh	Pleated Strainer insert 250µ 72 mesh	Pleated Strainer insert 500µ 38 mesh
FPT inside pipe thread, NPT (ANSI/ASME B 1.20.1) - Angleway										
15	½	FIA 15 FTP ANG	**148B5246**	**148H3122**	**148H3124**	**148H3126**	**148H3128**	**148H3303**	**148H3363**	-
20	¾	FIA 20 FTP ANG	**148B5346**							
25	1	FIA 25 FTP ANG	**148B5446**	**148H3123**	**148H3125**	**148H3127**	**148H3129**	**148H3304**	**148H3269**	-
32	1¼	FIA 32 FTP ANG	**148B5547**							
FPT inside pipe thread, NPT (ANSI/ASME B 1.20.1) - Straightway										
15	½	FIA 15 FTP STR	**148B5249**	**148H3122**	**148H3124**	**148H3126**	**148H3128**	**148H3303**	**148H3363**	-
20	¾	FIA 20 FTP STR	**148B5349**							
25	1	FIA 25 FTP STR	**148B5449**	**148H3123**	**148H3125**	**148H3127**	**148H3129**	**148H3304**	**148H3269**	-
32	1¼	FIA 32 FTP STR	**148B5549**							
Socket welding ANSI (B 16.11) - Angleway										
15	½	FIA 15 SOC ANG	**148B5245**	**148H3122**	**148H3124**	**148H3126**	**148H3128**	**148H3303**	**148H3363**	-
20	¾	FIA 20 SOC ANG	**148B5345**							
25	1	FIA 25 SOC ANG	**148B5445**	**148H3123**	**148H3125**	**148H3127**	**148H3129**	**148H3304**	**148H3269**	-
32	1¼	FIA 32 SOC ANG	**148B5546**							
40	1½	FIA 40 SOC ANG	**148B5643**							
50	2	FIA 50 SOC ANG	**148B5715**	**148H3157**	**148H3130**	**148H3138**	**148H3144**	**148H3179**	**148H3184**	**148H3189**
Socket welding ANSI (B 16.11) - Straightway										
15	½	FIA 15 SOC STR	**148B5248**	**148H3122**	**148H3124**	**148H3126**	**148H3128**	**148H3303**	**148H3363**	-
20	¾	FIA 20 SOC STR	**148B5348**							
25	1	FIA 25 SOC STR	**148B5448**	**148H3123**	**148H3125**	**148H3127**	**148H3129**	**148H3304**	**148H3269**	-
32	1¼	FIA 32 SOC STR	**148B5548**							
40	1½	FIA 40 SOC STR	**148B5645**							
50	2	FIA 50 SOC STR	**148B5717**	**148H3157**	**148H3130**	**148H3138**	**148H3144**	**148H3179**	**148H3184**	**148H3189**

SOC = Socket welding
FPT = Inside pipe thread

ANG = Angleway
STR = Straightway

Accessories

Part	Accessory for	**Code number**
Magnet insert	FIA 80-100	**148H3447**
	FIA 125-200	**148H3448**

Part	Accessory for	**Code number**
Strainer insert µ150 with removable insert µ50 for the first start up	FIA 15-20	**148H3301**
	FIA 25-40	**148H3302**

Part	Accessory for	**Code number**
Filter bag	FIA 50	**148H3150**
	FIA 65	**148H3151**
	FIA 80	**148H3152**
	FIA 100	**148H3153**
	FIA 125	**148H3154**
	FIA 150	**148H3155**
	FIA 200	**148H3156**

Ordering FIA stgrainers from the parts programme

Example
(select from table 1 and 2)

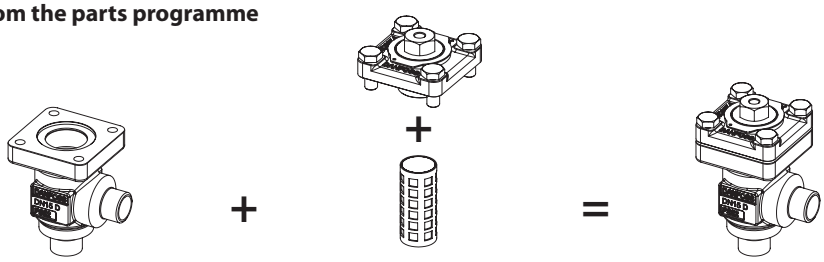

Strainer housing, size 25 (1 in.),
ANSI butt weld, angleway,
148B5454
Table 1

+

Top part, FIA, size 25 (1 in.)
148B5484
+
Strainer insert, 250µ, 72 mesh
148H3127
Table 2

Table 1
SVL valve housings w/different connections

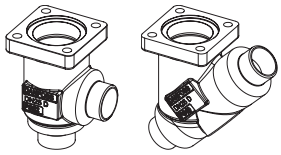

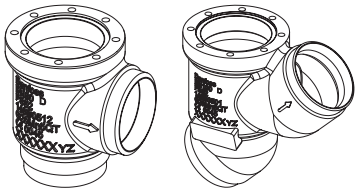

Sizes [DN]		DN 15-65 mm (½ - 2½ in.)		DN 80-125 mm (3 - 5 in.)			
		Valve Housing SVL					
		ANSI-Butt weld		SOC		FPT	
mm	in.	ANG	STR	ANG	STR	ANG	STR
15	½	**148B5254**	**148B5255**	**148B5256**	**148B5257**	**148B5258**	**148B5259**
20	¾	**148B5354**	**148B5355**	**148B5356**	**148B5357**	**148B5358**	**148B5359**
25	1	**148B5454**	**148B5455**	**148B5456**	**148B5457**	**148B5458**	**148B5459**
32	1¼	**148B5578**	**148B5579**	**148B5580**	**148B5581**	**148B5582**	**148B5583**
40	1½	**148B5654**	**148B5655**	**148B5656**	**148B5657**		
50	2	**148B5743**	**148B5744**	**148B5745**	**148B5746**		
65	2½	**148B5818**	**148B5819**				
80	3	**148B5914**	**148B5915**				
100	4	**148B6016**	**148B6017**				
125	5	**148B6114**	**148B6115**				

Table 2
FIA complete top part including gaskets and bolts

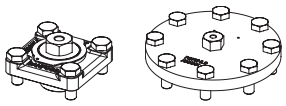

Sizes [DN]		FIA 15-65 / FIA 80-125								
mm	in.	Complete top part FIA		Strainer insert 100µ 150 mesh	Strainer insert 150µ 100 mesh	Strainer insert 250µ 72 mesh	Strainer insert 500µ 38 mesh	Pleated Strainer insert 150µ 100 mesh	Pleated Strainer insert 250µ 72 mesh	Pleated Strainer insert 500µ 38 mesh
15	½	**148B5284**	+	**148H3122**	**148H3124**	**148H3126**	**148H3128**	**148H3303**	-	-
20	¾									
25	1	**148B5484**	+	**148H3123**	**148H3125**	**148H3127**	**148H3129**	**148H3304**	**148H3269**	-
32	1¼									
40	1½									
50	2	**148B5748**	+	**148H3157**	**148H3130**	**148H3138**	**148H3144**	**148H3179**	**148H3184**	**148H3189**
65	2½	**148B5832**	+	-	**148H3131**	**148H3139**	**148H3145**	**148H3180**	**148H3185**	**148H3190**
80	3	**148B5922**	+	-	**148H3119**	**148H3120**	**148H3121**	**148H3181**	**148H3186**	**148H3191**
100	4	**148B6024**	+	-	**148H3132**	**148H3140**	**148H3146**	**148H3182**	**148H3187**	**148H3192**
125	5	**148B6122**	+	-	**148H3133**	**148H3141**	**148H3147**	**148H3183**	**148H3188**	**148H3193**

Danfoss can accept no responsibility for possible errors in catalogues, brochures and other printed material. Danfoss reserves the right to alter its products without notice. This also applies to products already on order provided that such alterations can be made without subsequential changes being necessary in specifications already agreed.
All trademarks in this material are property of the respective companies. Danfoss and the Danfoss logotype are trademarks of Danfoss A/S. All rights reserved.